dbh Logistics IT AG

Implementation Guide IFTMCS D.00B
Version 1.9.3

Changelog

Date	Version	Changes	Author
03.04.2012	1.9	General additions/changes: • TSR (Segment No. 6): Added code „00“ • CNT (Segment No. 10): Changed qualifier from „8“ to „11“ • SG12 (Segments No. 49-52): Added segment group for contact information regarding the consignee • Added some remarks Added segments for compatibility to the IMP platform: • Release order reference + expiry date (Segments No. 15,16; RFF+ATY/DTM+36) • Oncarriage instructions (Segment No. 23; RFF+030) • Generation of transport order (Segment No. 94; RFF+ADN) • Delivery address of transport order (Segment No. 96; NAD+UC) Added segments regarding EHGE messages via IMP: • Liner service (Segment No. 7; FTX+OSI) • Routing (Segment No. 28; LOC+92) • Vessel operator (Segment No. 60; NAD+CPE)	Bernd Kaßner
01.10.2012	1.9.2	• Added Entitled Disposition Party in NAD+AG • Added use of EORI in NAD segments • Added Indicator "Actual first customs office of entry" in LOC+11 • Added Range of Commodities in FTX+AAA • Added reference of an Exit Summary Declaration in RFF+AEI (on goods item level) • Cleaned up function codes in RFF+BGM • Cleaned up valid codes in FTX+AAH • Updated data fields used for SumA / EXS / BHT • Revised general comments / descriptions / supplements	Bernd Kaßner

Contents

Changelog **2**

1. Introduction **4**

2. Message Structure **5**

3. Branching Diagram **9**

4. Segments **24**

5. Example Message **127**

1. Introduction

This document specifies the IFTMCS message for sending cargo manifests electronically to the BIP platform of dbh.

To mark the occasion, we especially want to point out that for the the replacement of previously sent data in the **BGM** segment (BGM+707) in group 1225 the value **5** must be used and the previously transmitted **document number** must be provided with the replacement message.

2. Message Structure

Counter	No	Tag	St	MaxOcc	Level	Content
0000	1	**UNA**	C	1	0	Service string advice
0000	2	**UNB**	M	1	0	Interchange header
0010	3	**UNH**	M	1	0	Message header
0020	4	**BGM**	M	1	0	Beginning of message
0050	5	**DTM**	M	9	1	Message Creation Date
0060	6	**TSR**	C	1	1	Transport service requirements
0090	7	**FTX**	C	1	1	Liner Service
0100	8	**CNT**	M	1	1	Total Gross Weight
0100	9	**CNT**	C	1	1	Total number of containers
0100	10	**CNT**	D	1	1	Total Number of Pieces
0100	11	**CNT**	C	1	1	Number of goods positions
0120		**SG1**	O	1	1	LOC
0130	12	**LOC**	M	1	1	Place/location identification
0180		**SG3**	M	1	1	RFF
0190	13	**RFF**	M	1	1	B/L Number (Commercial Reference Number)
0180		**SG3**	D	1	1	RFF
0190	14	**RFF**	M	1	1	Forwarder's reference
0180		**SG3**	C	1	1	RFF-DTM
0190	15	**RFF**	M	1	1	Release order reference
0200	16	**DTM**	C	1	2	Date of expiry
0180		**SG3**	M	1	1	RFF
0190	17	**RFF**	M	1	1	Transportrichtung
0180		**SG3**	C	1	1	RFF
0190	18	**RFF**	M	1	1	Indicator for generation of further messages
0180		**SG3**	C	99	1	RFF
0190	19	**RFF**	M	1	1	Indicator for generation of Re-Export Notification/EXS
0180		**SG3**	D	1	1	RFF
0190	20	**RFF**	M	1	1	Reference / Local Reference Number of original declaration
0180		**SG3**	D	1	1	RFF
0190	21	**RFF**	M	1	1	ID of previous customs declaration
0180		**SG3**	C	1	1	RFF
0190	22	**RFF**	M	1	1	Customs Reference to summary declaration
0180		**SG3**	C	1	1	RFF
0190	23	**RFF**	M	1	1	On Carriage Instructions
0460		**SG8**	M	99	1	TDT-SG9-SG10
0470	24	**TDT**	M	1	1	Vessel Information
0500		**SG9**	M	1	2	Information about the PoD
0510	25	**LOC**	M	1	2	Place/location identification
0520	26	**DTM**	M	1	3	Date/time/period

Counter = Counter of segment/group within the standard
No = Consecutive segment number
MaxOcc = Maximum occurrence of the segment/group

St = Status
EDIFACT: M=Mandatory, C=Conditional
User specific: R=Required, O=Optional, D=Dependent, A=Advised, N=Not used

Counter	No	Tag	St	MaxOcc	Level	Content
0520	27	**DTM**	O	9	3	Date/time/period
0500		**SG9**	D	97	2	LOC
0510	28	**LOC**	M	1	2	Routing
0500		**SG9**	M	1	2	Information about the PoL
0510	29	**LOC**	M	1	2	Place/location identification
0520	30	**DTM**	C	1	3	Date/time/period
0520	31	**DTM**	C	1	3	Date/time/period
0500		**SG9**	C	2	2	LOC
0510	32	**LOC**	M	1	2	Place/location identification
0500		**SG9**	C	1	2	Information about the first customs office at entry
0510	33	**LOC**	M	1	2	Place/location identification
0520	34	**DTM**	C	9	3	Date/time/period
0530		**SG10**	C	1	2	RFF
0540	35	**RFF**	M	1	2	Reference
0530		**SG10**	C	1	2	RFF
0540	36	**RFF**	M	1	2	DAKOSY- or SIS Voyage Number
0460		**SG8**	C	99	1	TDT-SG9-SG10
0470	37	**TDT**	M	1	1	Details of transport
0500		**SG9**	C	99	2	LOC-DTM
0510	38	**LOC**	M	1	2	Place/location identification
0520	39	**DTM**	C	9	3	Date/time/period
0530		**SG10**	C	1	2	RFF
0540	40	**RFF**	M	1	2	DAKOSY- or SIS Voyage Number
0560		**SG11**	M	1	1	NAD-SG12
0570	41	**NAD**	M	1	1	Information about the presenter / the company lodging the declaration
0600		**SG12**	C	1	2	CTA-COM
0610	42	**CTA**	M	1	2	Contact information
0620	43	**COM**	C	9	3	Communication contact
0560		**SG11**	C	1	1	NAD-SG12
0570	44	**NAD**	M	1	1	Information about the carrier
0600		**SG12**	C	1	2	CTA-COM
0610	45	**CTA**	M	1	2	Contact information
0620	46	**COM**	C	9	3	Communication contact
0560		**SG11**	M	1	1	NAD
0570	47	**NAD**	M	1	1	Information about the shipper/consignor
0560		**SG11**	M	1	1	NAD
0570	48	**NAD**	M	1	1	Information about the consignee
0600		**SG12**	C	9	2	CTA-COM
0610	49	**CTA**	M	1	2	Contact information
0620	50	**COM**	R	9	3	Communication contact

Counter = Counter of segment/group within the standard
No = Consecutive segment number
MaxOcc = Maximum occurrence of the segment/group

St = Status
EDIFACT: M=Mandatory, C=Conditional
User specific: R=Required, O=Optional, D=Dependent, A=Advised, N=Not used

Counter	No	Tag	St	MaxOcc	Level	Content
0600		**SG12**	C	9	2	CTA-COM
0610	51	**CTA**	M	1	2	Contact information
0620	52	**COM**	C	9	3	Communication contact
0560		**SG11**	C	1	1	NAD
0570	53	**NAD**	M	1	1	Notify Party
0560		**SG11**	C	1	1	NAD
0570	54	**NAD**	M	1	1	Information about the representative
0560		**SG11**	C	1	1	NAD-SG15
0570	55	**NAD**	M	1	1	Warehouse Keeper
0740		**SG15**	M	9	2	RFF
0750	56	**RFF**	M	1	2	Storage Location
0560		**SG11**	C	1	1	NAD-SG12
0570	57	**NAD**	M	1	1	Information about the person lodging a declaration
0600		**SG12**	M	9	2	CTA-COM
0610	58	**CTA**	M	1	2	Contact information
0620	59	**COM**	M	9	3	Contact details of responsible Person
0560		**SG11**	D	1	1	NAD
0570	60	**NAD**	M	1	1	Vessel Operator
0890		**SG18**	M	999	1	GID-TMP-RNG-LOC-PIA-FTX-SG20-SG22-SG23-SG24-SG27-S30
0900	61	**GID**	M	1	1	Package information
0920	62	**TMP**	C	1	2	Temperature
0930	63	**RNG**	C	1	2	Range details
0950	64	**LOC**	D	1	2	Country of origin
0950	65	**LOC**	D	1	2	Country of destination
0950	66	**LOC**	D	1	2	Place of (final) destination
0970	67	**PIA**	D	1	2	Commodity code
0980	68	**FTX**	M	1	2	Goods Description
0980	69	**FTX**	D	1	2	Free text
0980	70	**FTX**	C	1	2	Free text
1040		**SG20**	M	1	2	MEA
1050	71	**MEA**	M	1	2	Gross Weight (Goods Item Level)
1100		**SG22**	D	1	2	RFF
1110	72	**RFF**	M	1	2	MRN of ENS declaration (Goods Item level) or exemption
1100		**SG22**	C	9	2	RFF
1110	73	**RFF**	M	1	2	Reference
1100		**SG22**	C	9	2	RFF-DTM
1110	74	**RFF**	M	1	2	Reference
1120	75	**DTM**	C	9	3	Issue date
1130		**SG23**	C	9	2	PCI
1140	76	**PCI**	M	1	2	Marks & Numbers

Counter = Counter of segment/group within the standard
No = Consecutive segment number
MaxOcc = Maximum occurrence of the segment/group

St = Status
EDIFACT: M=Mandatory, C=Conditional
User specific: R=Required, O=Optional, D=Dependent, A=Advised, N=Not used

Counter	No	Tag	St	MaxOcc	Level	Content
1180		**SG24**	C	9	2	DOC
1190	77	**DOC**	M	1	2	Document/message details
1260		**SG27**	M	999	2	SGP-SG28
1270	78	**SGP**	M	1	2	Container Number
1290		**SG28**	C	1	3	MEA
1300	79	**MEA**	M	1	3	Weight per container
1410		**SG30**	C	99	2	DGS-FTX
1420	80	**DGS**	M	1	2	Dangeous Goods (DG) Information
1430	81	**FTX**	C	1	3	Free text
1550		**SG35**	M	99999	1	EQD-MEA-DIM-SEL-TPL-FTX-RFF-RFF-SG37
1560	82	**EQD**	M	1	1	Container Information
1590	83	**MEA**	R	2	2	Measurements
1600	84	**DIM**	C	5	2	Off dimension information
1610	85	**SEL**	C	99	2	Seal IDs
1620	86	**TPL**	O	1	2	Transport placement
1650	87	**FTX**	C	1	2	Free text
1660	88	**RFF**	O	9	2	Reference
1660	89	**RFF**	C	9	2	Booking reference
1660	90	**RFF**	C	9	2	Reference
1660	91	**RFF**	C	9	2	Reference
1750		**SG37**	C	1	2	NAD
1760	92	**NAD**	M	1	2	Container Operator
1750		**SG37**	D	1	2	NAD
1760	93	**NAD**	M	1	2	Transport order: Delivery address
1870	94	**UNT**	M	1	0	Message trailer
0000	95	**UNZ**	M	1	0	Interchange trailer

Counter = Counter of segment/group within the standard
No = Consecutive segment number
MaxOcc = Maximum occurrence of the segment/group

St = Status
EDIFACT: M=Mandatory, C=Conditional
User specific: R=Required, O=Optional, D=Dependent, A=Advised, N=Not used

3. Branching Diagram

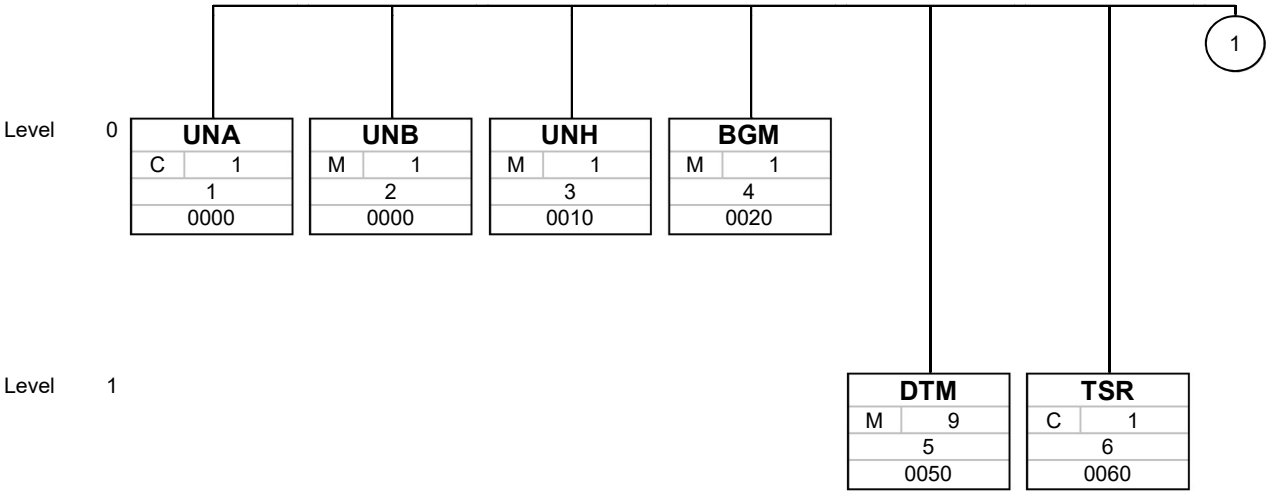

Tag	
St	MaxOcc
No	
Counter	

Tag = Segment/Group Tag
St = Status (M=Mandatory, C=Conditional, R=Required, O=Optional, A=Advised, D=Dependent)
MaxOcc = Maximum occurrence of the segment/group
No = Consecutive segment number
Counter = Counter of segment/group within the standard

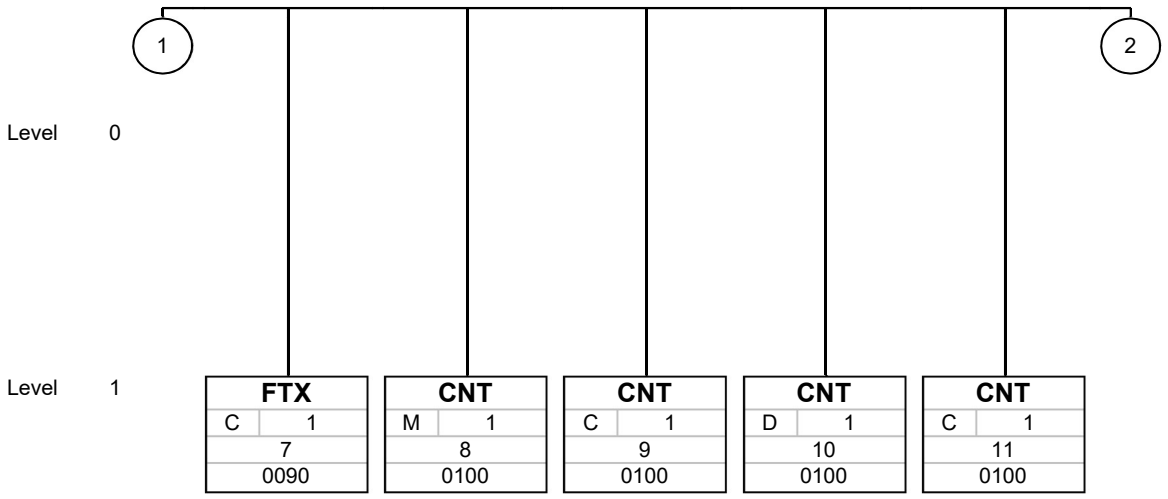

Tag	
St	MaxOcc
No	
Counter	

Tag = Segment/Group Tag
St = Status (M=Mandatory, C=Conditional, R=Required, O=Optional, A=Advised, D=Dependent)
MaxOcc = Maximum occurrence of the segment/group
No = Consecutive segment number
Counter = Counter of segment/group within the standard

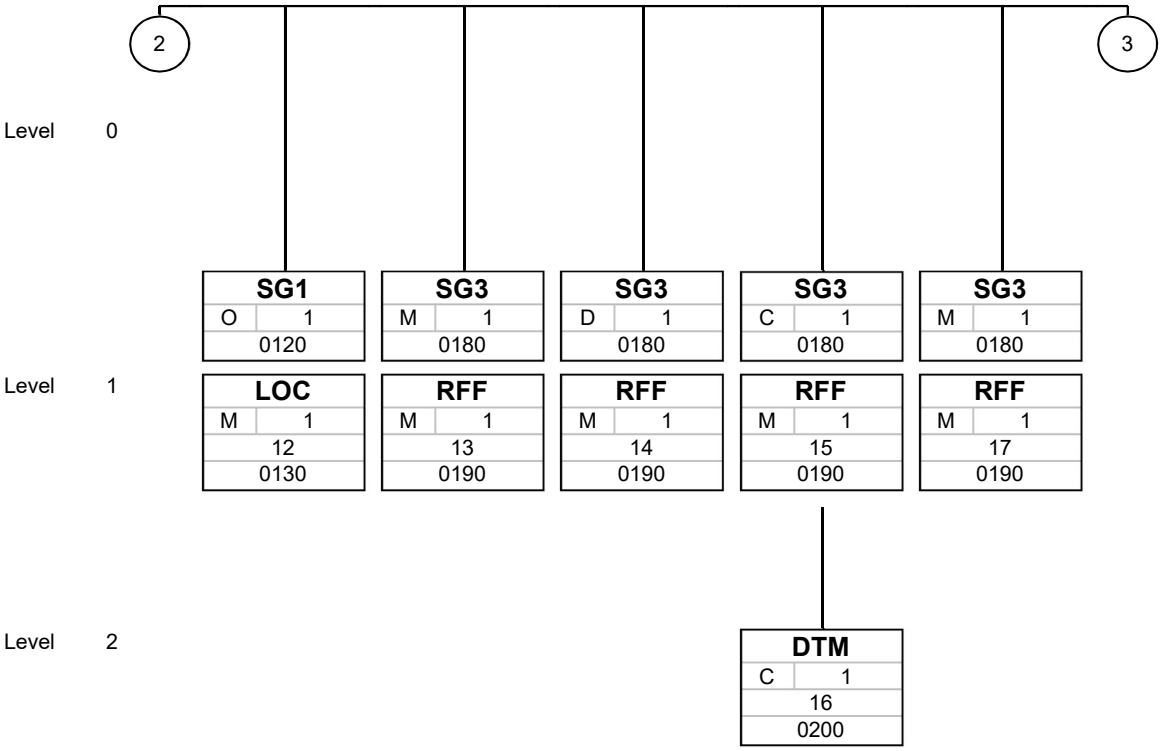

Tag	
St	MaxOcc
No	
Counter	

Tag = Segment/Group Tag
St = Status (M=Mandatory, C=Conditional, R=Required, O=Optional, A=Advised, D=Dependent)
MaxOcc = Maximum occurrence of the segment/group
No = Consecutive segment number
Counter = Counter of segment/group within the standard

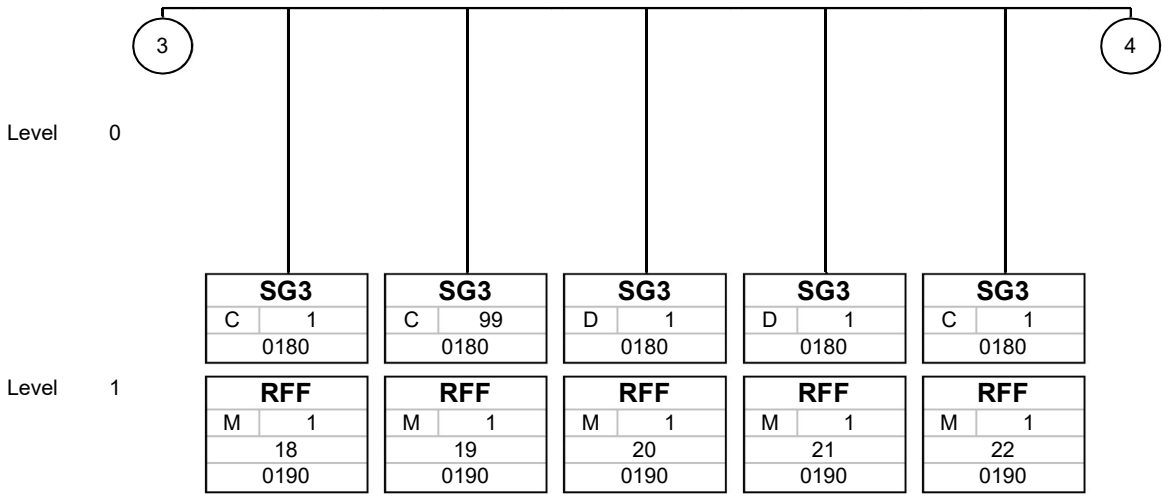

Tag	
St	MaxOcc
No	
Counter	

Tag = Segment/Group Tag
St = Status (M=Mandatory, C=Conditional, R=Required, O=Optional, A=Advised, D=Dependent)
MaxOcc = Maximum occurrence of the segment/group
No = Consecutive segment number
Counter = Counter of segment/group within the standard

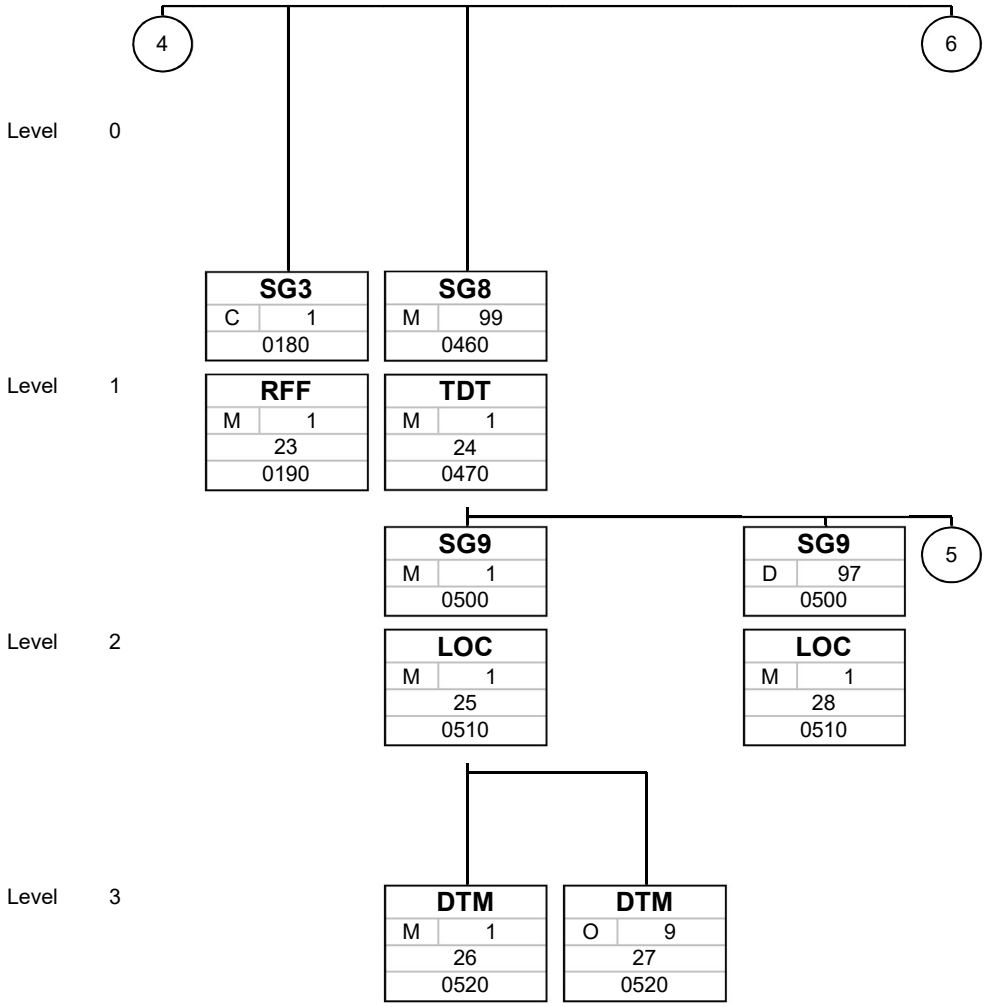

Tag	
St	MaxOcc
No	
Counter	

Tag = Segment/Group Tag
St = Status (M=Mandatory, C=Conditional, R=Required, O=Optional, A=Advised, D=Dependent)
MaxOcc = Maximum occurrence of the segment/group
No = Consecutive segment number
Counter = Counter of segment/group within the standard

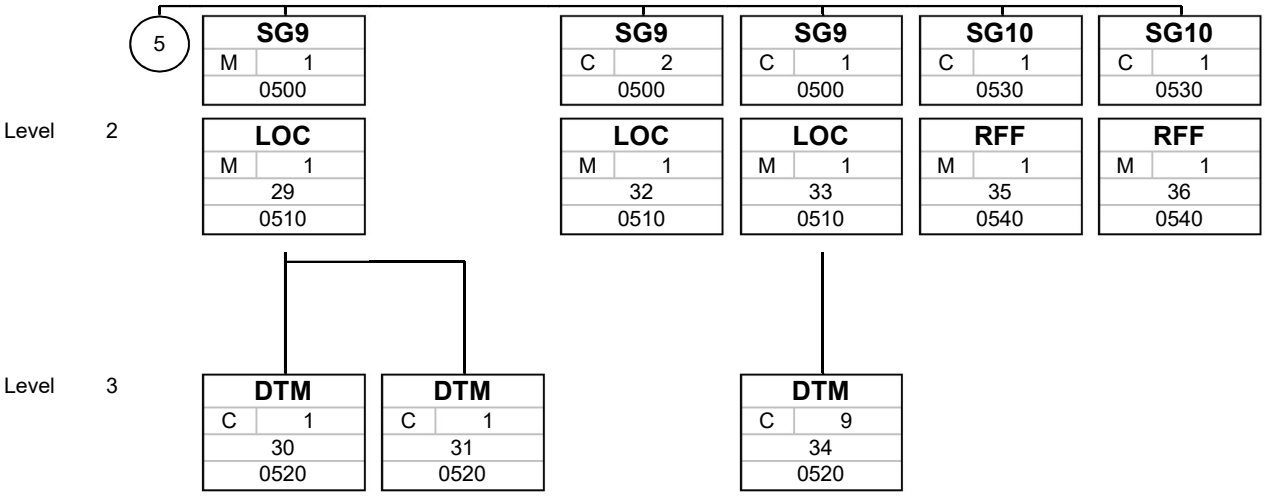

Tag	
St	MaxOcc
No	
Counter	

Tag = Segment/Group Tag
St = Status (M=Mandatory, C=Conditional, R=Required, O=Optional, A=Advised, D=Dependent)
MaxOcc = Maximum occurrence of the segment/group
No = Consecutive segment number
Counter = Counter of segment/group within the standard

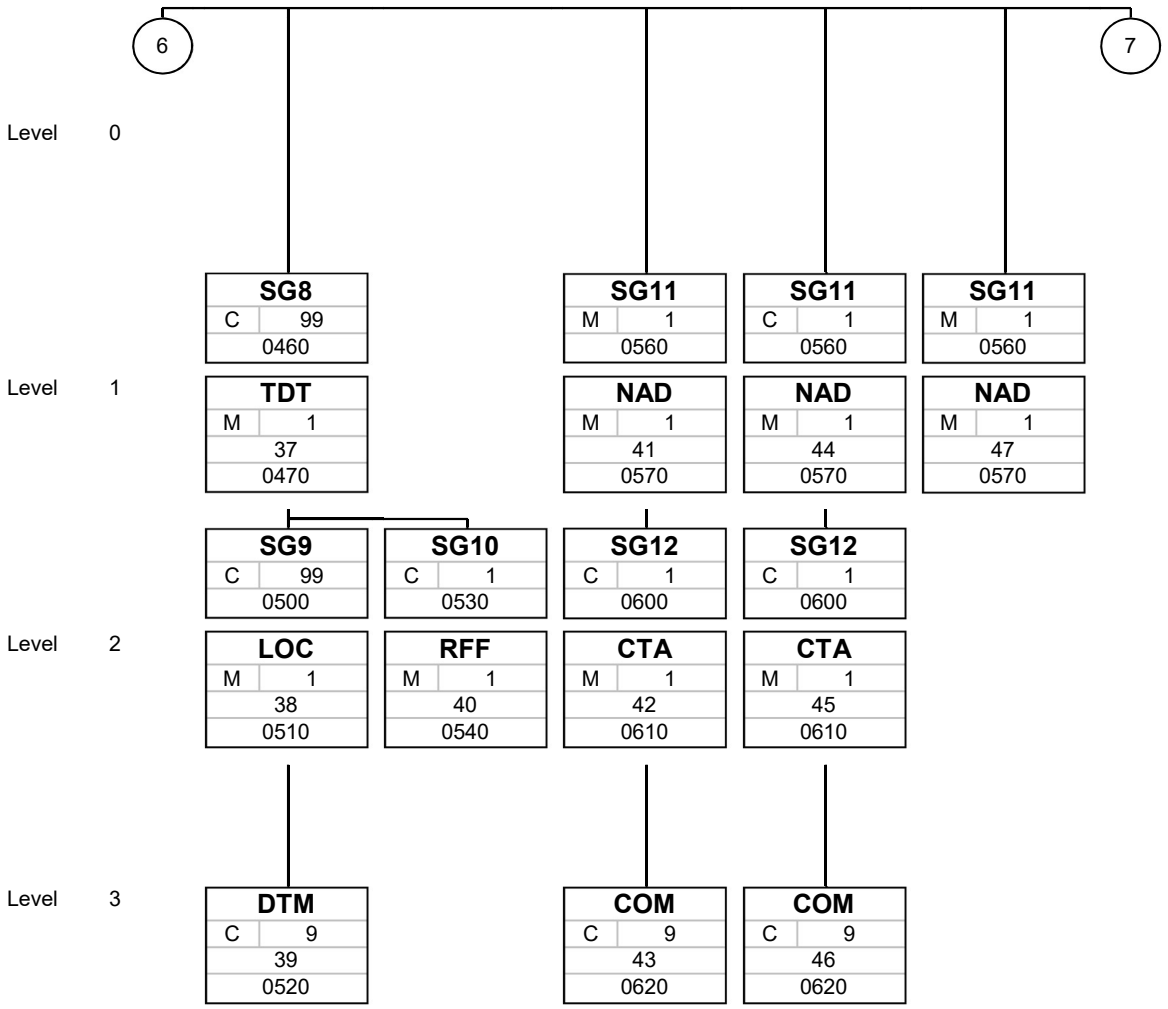

Tag	
St	MaxOcc
No	
Counter	

Tag = Segment/Group Tag
St = Status (M=Mandatory, C=Conditional, R=Required, O=Optional, A=Advised, D=Dependent)
MaxOcc = Maximum occurrence of the segment/group
No = Consecutive segment number
Counter = Counter of segment/group within the standard

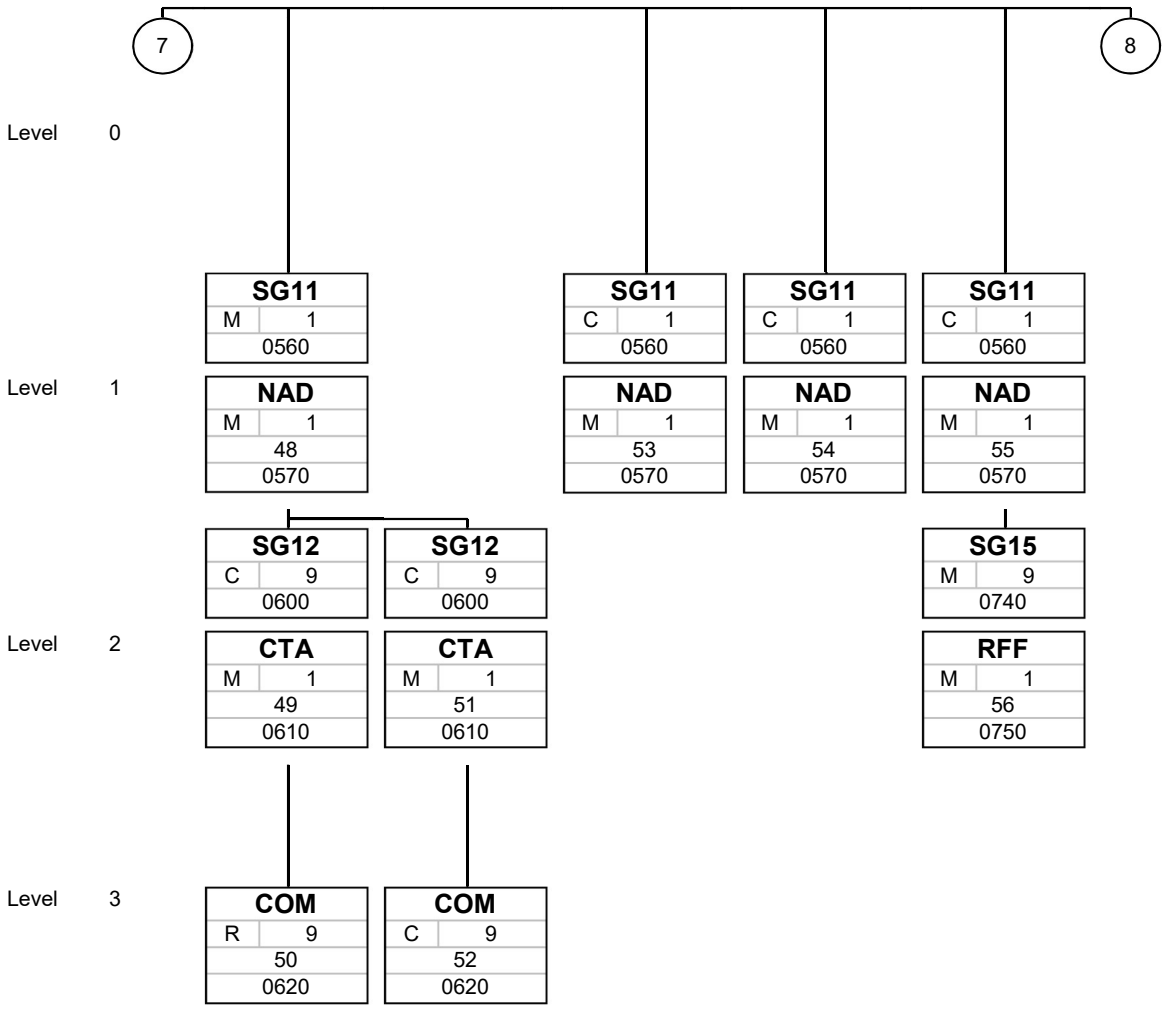

Tag	
St	MaxOcc
No	
Counter	

Tag = Segment/Group Tag
St = Status (M=Mandatory, C=Conditional, R=Required, O=Optional, A=Advised, D=Dependent)
MaxOcc = Maximum occurrence of the segment/group
No = Consecutive segment number
Counter = Counter of segment/group within the standard

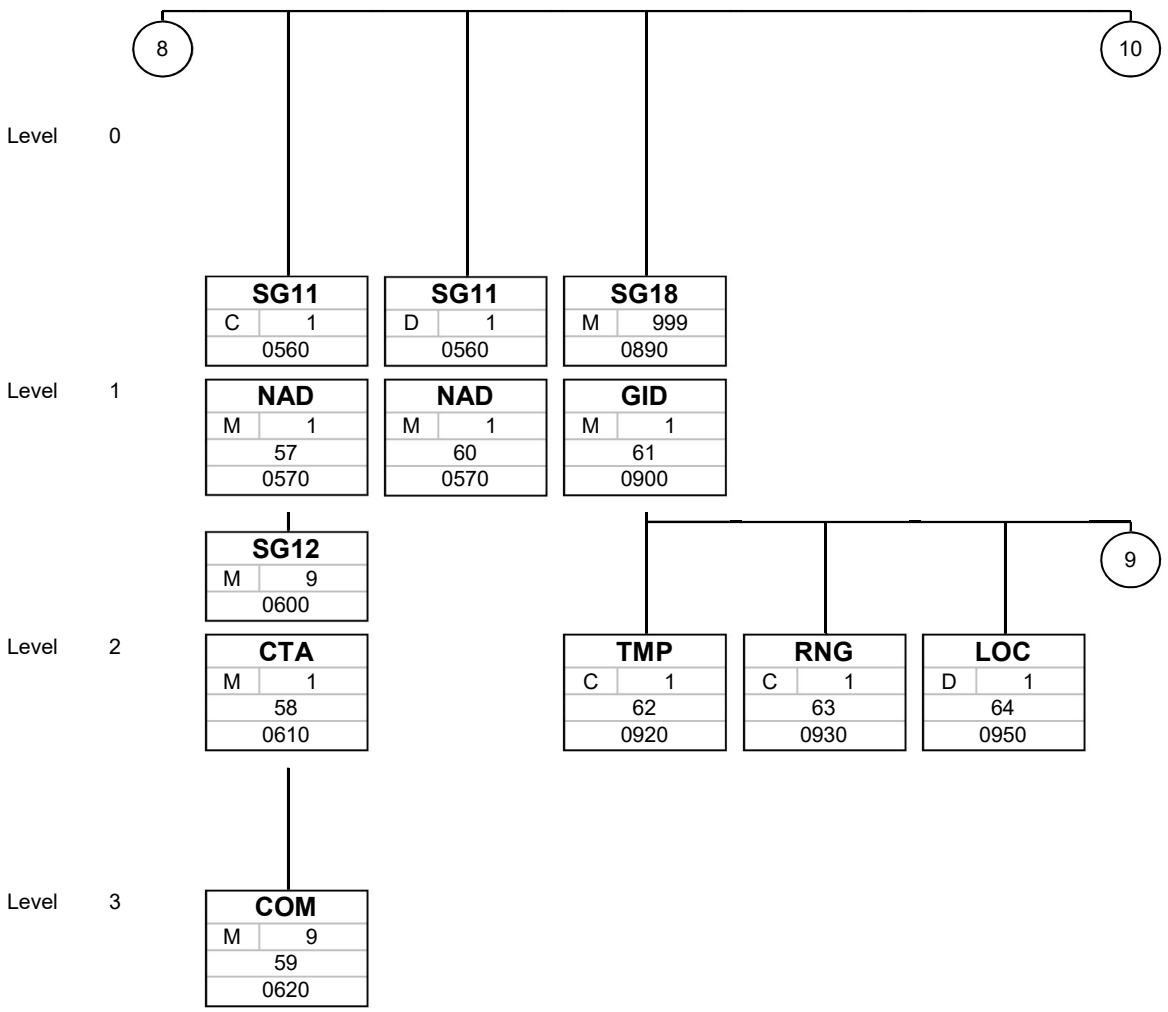

Tag	
St	MaxOcc
No	
Counter	

Tag = Segment/Group Tag
St = Status (M=Mandatory, C=Conditional, R=Required, O=Optional, A=Advised, D=Dependent)
MaxOcc = Maximum occurrence of the segment/group
No = Consecutive segment number
Counter = Counter of segment/group within the standard

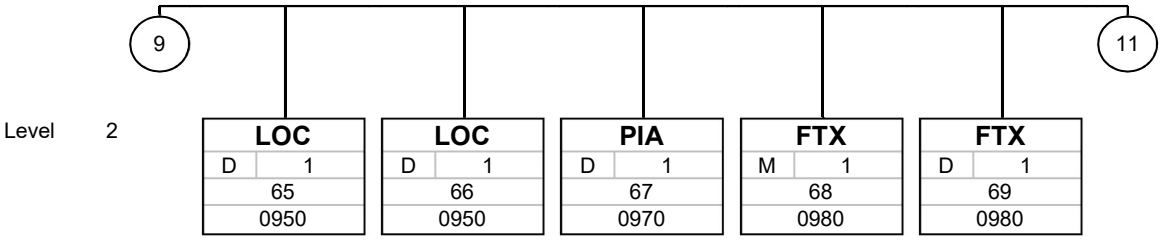

Tag	Tag = Segment/Group Tag
St MaxOcc	St = Status (M=Mandatory, C=Conditional, R=Required, O=Optional, A=Advised, D=Dependent)
No	MaxOcc = Maximum occurrence of the segment/group
Counter	No = Consecutive segment number
	Counter = Counter of segment/group within the standard

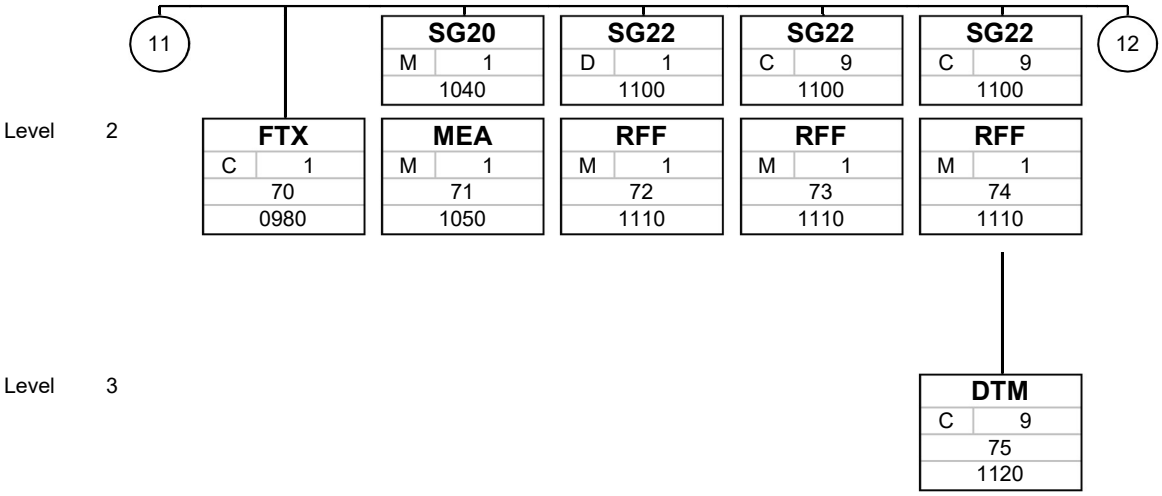

Tag	
St	MaxOcc
No	
Counter	

Tag = Segment/Group Tag
St = Status (M=Mandatory, C=Conditional, R=Required, O=Optional, A=Advised, D=Dependent)
MaxOcc = Maximum occurrence of the segment/group
No = Consecutive segment number
Counter = Counter of segment/group within the standard

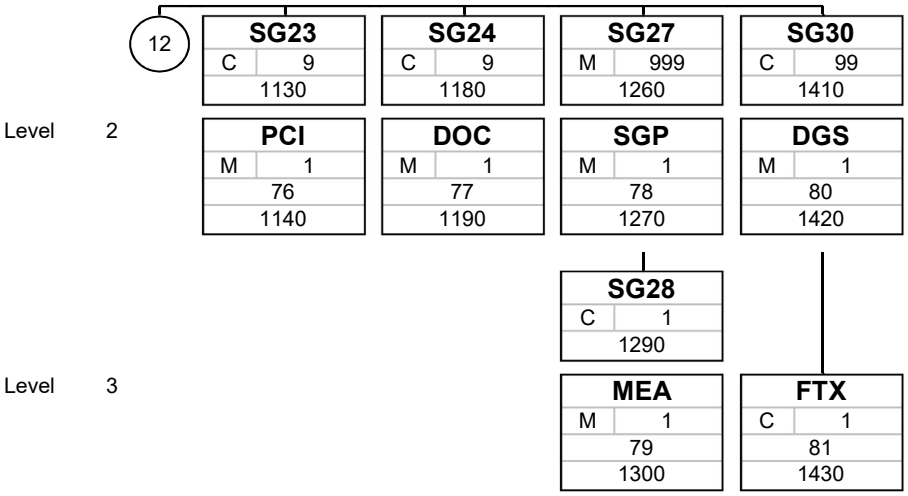

Tag	
St	MaxOcc
No	
Counter	

Tag = Segment/Group Tag
St = Status (M=Mandatory, C=Conditional, R=Required, O=Optional, A=Advised, D=Dependent)
MaxOcc = Maximum occurrence of the segment/group
No = Consecutive segment number
Counter = Counter of segment/group within the standard

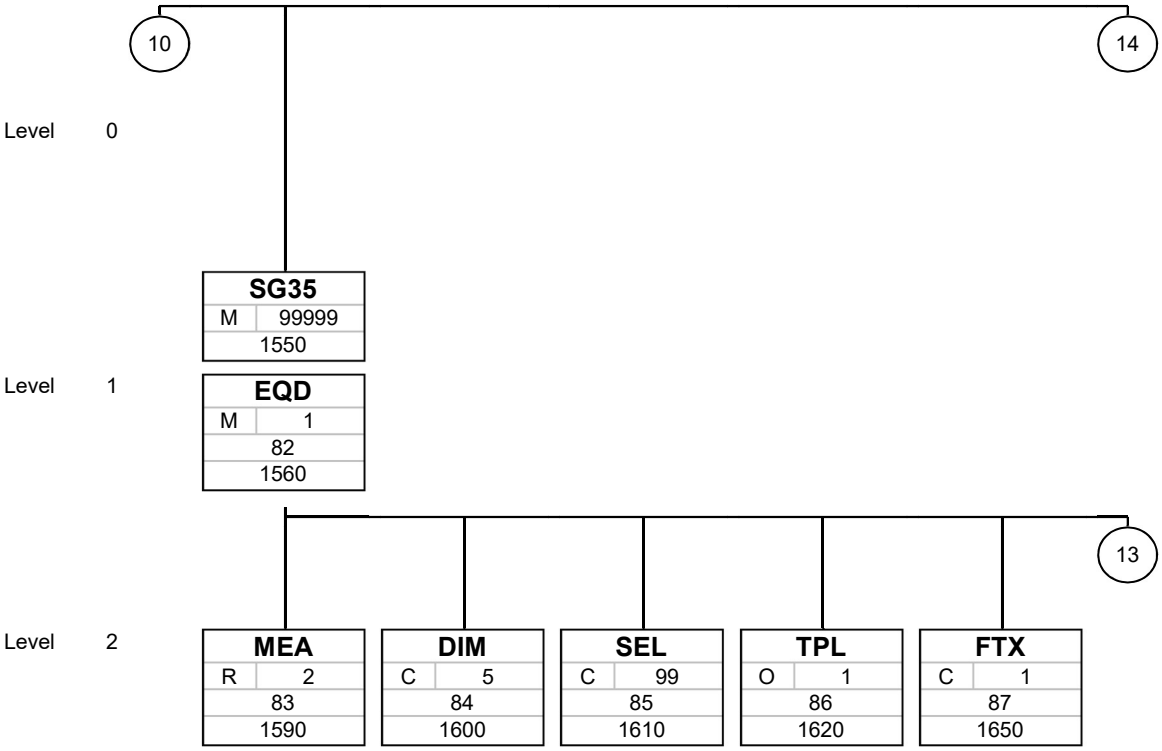

Tag	
St	MaxOcc
No	
Counter	

Tag = Segment/Group Tag
St = Status (M=Mandatory, C=Conditional, R=Required, O=Optional, A=Advised, D=Dependent)
MaxOcc = Maximum occurrence of the segment/group
No = Consecutive segment number
Counter = Counter of segment/group within the standard

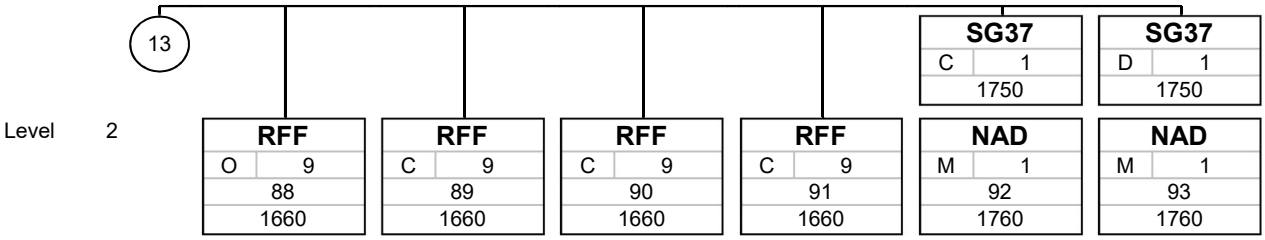

Tag	
St	MaxOcc
No	
Counter	

Tag = Segment/Group Tag
St = Status (M=Mandatory, C=Conditional, R=Required, O=Optional, A=Advised, D=Dependent)
MaxOcc = Maximum occurrence of the segment/group
No = Consecutive segment number
Counter = Counter of segment/group within the standard

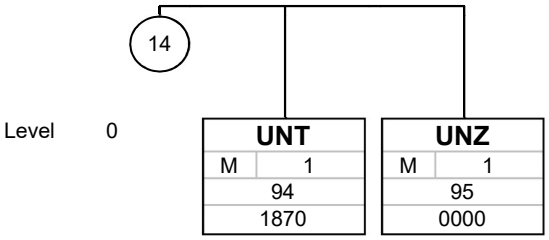

Tag	
St	MaxOcc
No	
Counter	

Tag = Segment/Group Tag
St = Status (M=Mandatory, C=Conditional, R=Required, O=Optional, A=Advised, D=Dependent)
MaxOcc = Maximum occurrence of the segment/group
No = Consecutive segment number
Counter = Counter of segment/group within the standard

4. Segments

Counter	No	Tag	St	MaxOcc	Level	Name
0000	1	**UNA**	C	1	0	**Service string advice**

Beschreibung:

		Standard		Implementation		
Tag	Name	St	Format	St	Format	Usage / Remark
UNA						
UNA1	Component data element separator	M	an1	M	an1	
UNA2	Data element separator	M	an1	M	an1	
UNA3	Decimal notation	M	an1	M	an1	
UNA4	Release indicator	M	an1	M	an1	
UNA5	Reserved for future use	M	an1	M	an1	
UNA6	Segment terminator	M	an1	M	an1	

Remark:

Example:

```
UNA:+.? '
```

No = Consecutive segment number
MaxOcc = Maximum occurrence of the segment/group
Counter = Counter of segment/group within the standard

St = Status
EDIFACT: M=Mandatory, C=Conditional
User specific: R=Required, O=Optional, D=Dependent, A=Advised, N=Not used

Counter	No	Tag	St	MaxOcc	Level	Name
0000	2	**UNB**	M	1	0	**Interchange header**

Beschreibung:

		Standard		Implementation		
Tag	Name	St	Format	St	Format	Usage / Remark
UNB						
S001	Syntax identifier	M		M		
0001	Syntax identifier	M	a4	M	a4	
0002	Syntax version number	M	n1	M	n1	
S002	Interchange sender	M		M		
0004	Sender identification	M	an..35	M	an..35	Participant Code of the sending party
0007	Partner identification code qualifier	C	an..4	N		Not used
0008	Address for reverse routing	C	an..14	N		Not used
S003	Interchange recipient	M		M		
0010	Recipient identification	M	an..35	M	an..35	Please use the correct participant code in order to address the corresponding system Bremen (dbh) or in Hamburg (DAKOSY). **BIP Business Integration Platform (dbh)** **IMP Import Message Platform (DAKOSY)**
0007	Partner identification code qualifier	C	an..4	N		Not used
0014	Routing address	C	an..14	N		Not used
S004	Date/time of preparation	M		M		
0017	Date of preparation	M	n6	M	n6	
0019	Time of preparation	M	n4	M	n4	
0020	Interchange control reference	M	an..14	M	an..14	A unique reference number identifying this EDIFACT interchange.
S005	Recipient's reference, password	C		N		
0022	Recipient's reference/password	M	an..14	N		Not used
0025	Recipient's reference/password qualifier	C	an2	N		Not used
0026	Application reference	C	an..14	N		Not used
0029	Processing priority code	C	a1	N		Not used
0031	Acknowledgement request	C	n1	N		Not used
0032	Communications agreement ID	C	an..35	N		Not used
0035	Test indicator	C	n1	C	n1	Test indicator. If this field is submitted and has a value '1', the message will be treated as a test message. **1 Interchange is a test**

Remark:

Example:

```
UNB+UNOC:3+CARR+BIP+100913:1221+20100123100000++++++1'
```

No = Consecutive segment number
MaxOcc = Maximum occurrence of the segment/group
Counter = Counter of segment/group within the standard

St = Status
EDIFACT: M=Mandatory, C=Conditional
User specific: R=Required, O=Optional, D=Dependent, A=Advised, N=Not used

Counter	No	Tag	St	MaxOcc	Level	Name
0010	3	**UNH**	M	1	0	**Message header**

Beschreibung:

		Standard		Implementation		
Tag	Name	St	Format	St	Format	Usage / Remark
UNH						
0062	Message reference number	M	an..14	M	an..14	Unique technical reference identifying this EDIFACT message
S009	Message identifier	M		M		
0065	Message type	M	an..6	M	an..6	**IFTMCS Instruction contract status message**
0052	Message version number	M	an..3	M	an..3	**D Draft version/UN/EDIFACT Directory**
0054	Message release number	M	an..3	M	an..3	**00B Release 2000 - B**
0051	Controlling agency	M	an..2	M	an..2	**UN UN/CEFACT**
0057	Association assigned code	C	an..6	R	an..6	**BIP10 Für Importmanifeste / For import manifests** **BIP20 Für Exportmanifeste / For export manifests**
0068	Common access reference	C	an..35	N		Not used
S010	Status of the transfer	C		N		
0070	Sequence of transfers	M	n..2	N		Not used
0073	First and last transfer	C	a1	N		Not used

Remark:

Example:

```
UNH+20100122171055+IFTMCS:D:00B:UN:BIP10'
```

No = Consecutive segment number
MaxOcc = Maximum occurrence of the segment/group
Counter = Counter of segment/group within the standard

St = Status
EDIFACT: M=Mandatory, C=Conditional
User specific: R=Required, O=Optional, D=Dependent, A=Advised, N=Not used

Counter	No	Tag	St	MaxOcc	Level	Name
0020	4	**BGM**	M	1	0	**Beginning of message**

Beschreibung:

		Standard		Implementation		
Tag	Name	St	Format	St	Format	Usage / Remark
BGM						
C002	Document/message name	C		M		
1001	Document name code	C	an..3	M	an..3	**707 Bill of lading copy**
1131	Code list identification code	C	an..17	N		Not used
3055	Code list responsible agency code	C	an..3	N		Not used
1000	Document name	C	an..35	N		Not used
C106	Document/message identification	C		C		
1004	Document identifier	C	an..35	C	an..35	
1056	Version identifier	C	an..9	N		Not used
1060	Revision identifier	C	an..6	N		Not used
1225	Message function code	C	an..3	C	an..3	**1 Cancellation** **5 Replace** **9 Original** If omitted, 9=Original is assumed.
4343	Response type code	C	an..3	N		Not used

Remark:

Example:

```
BGM+707+201009121707+9'
```

No = Consecutive segment number
MaxOcc = Maximum occurrence of the segment/group
Counter = Counter of segment/group within the standard

St = Status
EDIFACT: M=Mandatory, C=Conditional
User specific: R=Required, O=Optional, D=Dependent, A=Advised, N=Not used

Counter	No	Tag	St	MaxOcc	Level	Name
0050	5	**DTM**	M	9	1	**Message Creation Date**

Beschreibung:

		Standard		Implementation		
Tag	Name	St	Format	St	Format	Usage / Remark
DTM						
C507	Date/time/period	M		M		
2005	Date or time or period function code qualifier	M	an..3	M	an..3	**137 Document/message date/time**
2380	Date or time or period value	C	an..35	M	n12	Creation date of the message. **Field (EXS):** Declaration date
2379	Date or time or period format code	C	an..3	M	an..3	**203 CCYYMMDDHHMM**

Remark:

Example:

```
DTM+137:201009121224:203'
```

No = Consecutive segment number
MaxOcc = Maximum occurrence of the segment/group
Counter = Counter of segment/group within the standard

St = Status
EDIFACT: M=Mandatory, C=Conditional
User specific: R=Required, O=Optional, D=Dependent, A=Advised, N=Not used

Counter	No	Tag	St	MaxOcc	Level	Name
0060	6	**TSR**	C	1	1	**Transport service requirements**

Beschreibung: Mandatory in case of partload containers (LCL)

		Standard		Implementation		
Tag	Name	St	Format	St	Format	Usage / Remark
TSR						
C536	Contract and carriage condition	C		C		
4065	Contract and carriage condition code	M	an..3	M	an..3	**27 Door-to-door** **28 Door-to-pier** **29 Pier-to-door** **30 Pier-to-pier** **00 Unknown** This value is mandatory in the TSR segment according to the EDIFACT standard, but currently is not used by BIP. If applicable, use the value "00".
1131	Code list identification code	C	an..17	N		Not used
3055	Code list responsible agency code	C	an..3	N		Not used
C233	Service	C		C		
7273	Service requirement code	M	an..3	M	an..3	**2 Full loads** **3 Less than full loads**
1131	Code list identification code	C	an..17	N		Not used
3055	Code list responsible agency code	C	an..3	N		Not used
7273	Service requirement code	C	an..3	N		Not used
1131	Code list identification code	C	an..17	N		Not used
3055	Code list responsible agency code	C	an..3	N		Not used
C537	Transport priority	C		N		
4219	Transport service priority code	M	an..3	N		Not used
1131	Code list identification code	C	an..17	N		Not used
3055	Code list responsible agency code	C	an..3	N		Not used
C703	Nature of cargo	C		N		
7085	Cargo type classification code	M	an..3	N		Not used
1131	Code list identification code	C	an..17	N		Not used
3055	Code list responsible agency code	C	an..3	N		Not used

Remark:

Example:

```
TSR+27+2'
```

No = Consecutive segment number
MaxOcc = Maximum occurrence of the segment/group
Counter = Counter of segment/group within the standard

St = Status
EDIFACT: M=Mandatory, C=Conditional
User specific: R=Required, O=Optional, D=Dependent, A=Advised, N=Not used

Counter	No	Tag	St	MaxOcc	Level	Name
0090	7	**FTX**	C	1	1	**Liner Service**

Beschreibung:
Remark (EHGE): Information about the liner service: Text field or code which is applicable for a service deposited in the web application.
This segment is IMP relevant only. Though BIP accepts the segment, it ignores the data.

		Standard		Implementation		
Tag	Name	St	Format	St	Format	Usage / Remark
FTX						
4451	Text subject code qualifier	M	an..3	M	an..3	**OSI Other service information**
4453	Free text function code	C	an..3	N		Not used
C107	Text reference	C		N		
4441	Free text value code	M	an..17	N		Not used
1131	Code list identification code	C	an..17	N		Not used
3055	Code list responsible agency code	C	an..3	N		Not used
C108	Text literal	C		C		
4440	Free text value	M	an..512	M	an..512	**Format (EHGE):** an..50
4440	Free text value	C	an..512	N		Not used
4440	Free text value	C	an..512	N		Not used
4440	Free text value	C	an..512	N		Not used
4440	Free text value	C	an..512	N		Not used
3453	Language name code	C	an..3	N		Not used
4447	Free text format code	C	an..3	N		Not used

Remark:

Example:
```
FTX+OSI+++CONSORTIUM'
```

No = Consecutive segment number
MaxOcc = Maximum occurrence of the segment/group
Counter = Counter of segment/group within the standard

St = Status
EDIFACT: M=Mandatory, C=Conditional
User specific: R=Required, O=Optional, D=Dependent, A=Advised, N=Not used

Counter	No	Tag	St	MaxOcc	Level	Name
0100	8	**CNT**	M	1	1	**Total Gross Weight**

Beschreibung:

		Standard		Implementation		
Tag	Name	St	Format	St	Format	Usage / Remark
CNT						
C270	Control	M		M		
6069	Control total type code qualifier	M	an..3	M	an..3	**7 Total gross weight**
6066	Control total value	M	n..18	M	n..14,3	Total Gross Weight of this shipment
6411	Measurement unit code	C	an..3	M	an..3	**KGM kilogram**

Remark:

Example:

```
CNT+7:9:KGM'
```

No = Consecutive segment number
MaxOcc = Maximum occurrence of the segment/group
Counter = Counter of segment/group within the standard

St = Status
EDIFACT: M=Mandatory, C=Conditional
User specific: R=Required, O=Optional, D=Dependent, A=Advised, N=Not used

Counter	No	Tag	St	MaxOcc	Level	Name
0100	9	**CNT**	C	1	1	**Total number of containers**

Beschreibung:

		Standard		Implementation		
Tag	Name	St	Format	St	Format	Usage / Remark
CNT						
C270	Control	M		M		
6069	Control total type code qualifier	M	an..3	M	an..3	**16 Total number of equipment**
6066	Control total value	M	n..18	M	n..18	Total no. of containers **Field (SumA):** Total no. of containers **Remark (SumA):** Max. 4 digits; optional field
6411	Measurement unit code	C	an..3	N		Not used

Remark:

Example:

```
CNT+16:9'
```

No = Consecutive segment number
MaxOcc = Maximum occurrence of the segment/group
Counter = Counter of segment/group within the standard

St = Status
EDIFACT: M=Mandatory, C=Conditional
User specific: R=Required, O=Optional, D=Dependent, A=Advised, N=Not used

Counter	No	Tag	St	MaxOcc	Level	Name
0100	10	**CNT**	D	1	1	**Total Number of Pieces**

Beschreibung: Mandatory when using the IFTMCS for Re-Export Notification or EXS (RFF+CUS = '1')

		Standard		Implementation		
Tag	Name	St	Format	St	Format	Usage / Remark
CNT						
C270	Control	M		M		
6069	Control total type code qualifier	M	an..3	M	an..3	**11 Total number of packages**
6066	Control total value	M	n..18	M	n..18	Total count of pieces in this shipment. **Field (EXS):** Total number of packages
6411	Measurement unit code	C	an..3	N		Not used

Remark:

Example:

```
CNT+11:15'
```

No = Consecutive segment number
MaxOcc = Maximum occurrence of the segment/group
Counter = Counter of segment/group within the standard

St = Status
EDIFACT: M=Mandatory, C=Conditional
User specific: R=Required, O=Optional, D=Dependent, A=Advised, N=Not used

Counter	No	Tag	St	MaxOcc	Level	Name
0100	11	**CNT**	C	1	1	**Number of goods positions**

Beschreibung: Mandatory when using the IFTMCS for Re-Export Notification or EXS (RFF+CUS = '1')

		Standard		Implementation		
Tag	Name	St	Format	St	Format	Usage / Remark
CNT						
C270	Control	M		M		
6069	Control total type code qualifier	M	an..3	M	an..3	**2 Number of line items in message**
6066	Control total value	M	n..18	M	n..18	Each occurence of segment group GID counts as a position. **Field (ZAPP):** Number of positions **Field (EXS):** Number of positions
6411	Measurement unit code	C	an..3	N		Not used

Remark:

Example:

```
CNT+2:1'
```

No = Consecutive segment number
MaxOcc = Maximum occurrence of the segment/group
Counter = Counter of segment/group within the standard

St = Status
EDIFACT: M=Mandatory, C=Conditional
User specific: R=Required, O=Optional, D=Dependent, A=Advised, N=Not used

Counter	No	Tag	St	MaxOcc	Level	Name
0120		**SG1**	O	1	1	**LOC**
0130	12	**LOC**	M	1	1	**Place/location identification**

Beschreibung:

		Standard		Implementation		
Tag	Name	St	Format	St	Format	Usage / Remark
LOC						
3227	Location function code qualifier	M	an..3	M	an..3	**91 Place of document issue**
C517	Location identification	C		C		
3225	Location name code	C	an..25	D	an..25	Either location code or location name (C517:3225) can be used
1131	Code list identification code	C	an..17	N		Not used
3055	Code list responsible agency code	C	an..3	N		Not used
3224	Location name	C	an..256	D	an..256	Name (free text) of the place of document issue.
C519	Related location one identification	C		N		
3223	First related location name code	C	an..25	N		Not used
1131	Code list identification code	C	an..17	N		Not used
3055	Code list responsible agency code	C	an..3	N		Not used
3222	First related location name	C	an..70	N		Not used
C553	Related location two identification	C		N		
3233	Second related location name code	C	an..25	N		Not used
1131	Code list identification code	C	an..17	N		Not used
3055	Code list responsible agency code	C	an..3	N		Not used
3232	Second related location name	C	an..70	N		Not used
5479	Relation code	C	an..3	N		Not used

Remark:

Example:

```
LOC+91+:::SHENZEN'
```

No = Consecutive segment number
MaxOcc = Maximum occurrence of the segment/group
Counter = Counter of segment/group within the standard

St = Status
EDIFACT: M=Mandatory, C=Conditional
User specific: R=Required, O=Optional, D=Dependent, A=Advised, N=Not used

Counter	No	Tag	St	MaxOcc	Level	Name
0180		**SG3**	M	1	1	**RFF**
0190	13	**RFF**	M	1	1	**B/L Number (Commercial Reference Number)**

Beschreibung:

		Standard		Implementation		
Tag	Name	St	Format	St	Format	Usage / Remark
RFF						
C506	Reference	M		M		
1153	Reference code qualifier	M	an..3	M	an..3	**BM Bill of lading number**
1154	Reference identifier	C	an..70	M	an..17	B/L Number. When using the IFTMCS for customs related purposes (ENS or Summary Decl. for temporary storage) this will be used as the commercial reference number. **Field (SumA):** Referencenumber **Field (ZAPP):** Forwarder's reference **Field (EXS):** Commercial reference number AND local reference number
1156	Document line identifier	C	an..6	N		Not used
4000	Reference version identifier	C	an..35	N		Not used
1060	Revision identifier	C	an..6	N		Not used

Remark:

Example:

```
RFF+BM:HJSC1234740'
```

No = Consecutive segment number
MaxOcc = Maximum occurrence of the segment/group
Counter = Counter of segment/group within the standard

St = Status
EDIFACT: M=Mandatory, C=Conditional
User specific: R=Required, O=Optional, D=Dependent, A=Advised, N=Not used

Counter	No	Tag	St	MaxOcc	Level	Name
0180		**SG3**	D	1	1	**RFF**
0190	14	**RFF**	M	1	1	**Forwarder's reference**

Beschreibung:

		Standard		Implementation		
Tag	Name	St	Format	St	Format	Usage / Remark
RFF						
C506	Reference	M		M		
1153	Reference code qualifier	M	an..3	M	an..3	**SRN Shipment reference number**
1154	Reference identifier	C	an..70	M	an..35	**Field (ZAPP):** Forwarder's reference **Remark (ZAPP):** If no forwarder's reference is provided in RFF+SRN, the B/L number (RFF+BM) will be used for the forwarder's reference instead
1156	Document line identifier	C	an..6	N		Not used
4000	Reference version identifier	C	an..35	N		Not used
1060	Revision identifier	C	an..6	N		Not used

Remark:

Example:

```
RFF+SRN:DZ303920101025'
```

No = Consecutive segment number
MaxOcc = Maximum occurrence of the segment/group
Counter = Counter of segment/group within the standard

St = Status
EDIFACT: M=Mandatory, C=Conditional
User specific: R=Required, O=Optional, D=Dependent, A=Advised, N=Not used

Counter	No	Tag	St	MaxOcc	Level	Name
0180		**SG3**	C	1	1	**RFF-DTM**

Wird im Zusammenhang mit dem Weitertransport / Transportauftrag verwendet.
This segment is IMP relevant only. Though BIP accepts the segment, it ignores the data.

0190	15	**RFF**	M	1	1	**Release order reference**

Beschreibung:

		Standard		Implementation		
Tag	Name	St	Format	St	Format	Usage / Remark
RFF						
C506	Reference	M		M		
1153	Reference code qualifier	M	an..3	M	an..3	**ATY Transport equipment release order reference**
1154	Reference identifier	C	an..70	R	an..35	
1156	Document line identifier	C	an..6	N		Not used
4000	Reference version identifier	C	an..35	N		Not used
1060	Revision identifier	C	an..6	N		Not used

Remark:

Example:

```
RFF+ATY:65544'
```

No = Consecutive segment number
MaxOcc = Maximum occurrence of the segment/group
Counter = Counter of segment/group within the standard

St = Status
EDIFACT: M=Mandatory, C=Conditional
User specific: R=Required, O=Optional, D=Dependent, A=Advised, N=Not used

Counter	No	Tag	St	MaxOcc	Level	Name
0180		**SG3**	C	1	1	**RFF-DTM**

Wird im Zusammenhang mit dem Weitertransport / Transportauftrag verwendet.
This segment is IMP relevant only. Though BIP accepts the segment, it ignores the data.

0200	16	**DTM**	C	1	2	**Date of expiry**

Beschreibung:

		Standard		Implementation		
Tag	Name	St	Format	St	Format	Usage / Remark
DTM						
C507	Date/time/period	M		M		
2005	Date or time or period function code qualifier	M	an..3	M	an..3	**36 Expiry date**
2380	Date or time or period value	C	an..35	R	an..35	
2379	Date or time or period format code	C	an..3	R	an..3	**102 CCYYMMDD**

Remark:

Example:

```
DTM+36:20120926:102'
```

No = Consecutive segment number
MaxOcc = Maximum occurrence of the segment/group
Counter = Counter of segment/group within the standard

St = Status
EDIFACT: M=Mandatory, C=Conditional
User specific: R=Required, O=Optional, D=Dependent, A=Advised, N=Not used

Counter	No	Tag	St	MaxOcc	Level	Name
0180		**SG3**	M	1	1	**RFF**
0190	17	**RFF**	M	1	1	**Transportrichtung**

Beschreibung:

		Standard		Implementation		
Tag	Name	St	Format	St	Format	Usage / Remark
RFF						
C506	Reference	M		M		
1153	Reference code qualifier	M	an..3	M	an..3	**DIR Transport direction**
1154	Reference identifier	C	an..70	M	a..3	**I Import** **T Transit** **E Export** **TS Transshipment** This information is needed a) as an indicator for the usage of IFTMCS data with regards to BIP and/or BHT; b) for statistical purposes Please note, that the terms listed above are defined in this context as follows: * Transit: Goods that remain on board. * Transshipment: Goods, that are unloaded from one vessel and loaded onto another. The incoming vessel is declared here. * Transshipment Export: Goods, that are unloaded from one vessel and loaded onto another. The outgoing vessel is declared here. * Import: Goods, that are unloaded from a vessel. Overland transportation e.g. to Russia is understood as import, too. * Export: Goods which are loaded onto a vessel for export after they were transported to the seaport from the hinterland **TSE Transshipment Export**
1156	Document line identifier	C	an..6	N		Not used
4000	Reference version identifier	C	an..35	N		Not used
1060	Revision identifier	C	an..6	N		Not used

Remark:

Example:

```
RFF+DIR:TS'
```

No = Consecutive segment number
MaxOcc = Maximum occurrence of the segment/group
Counter = Counter of segment/group within the standard

St = Status
EDIFACT: M=Mandatory, C=Conditional
User specific: R=Required, O=Optional, D=Dependent, A=Advised, N=Not used

Counter	No	Tag	St	MaxOcc	Level	Name
0180		**SG3**	C	1	1	**RFF**
0190	18	**RFF**	M	1	1	**Indicator for generation of further messages**

Beschreibung:

		Standard		Implementation		
Tag	Name	St	Format	St	Format	Usage / Remark
RFF						
C506	Reference	M		M		
1153	Reference code qualifier	M	an..3	M	an..3	**BGM**
1154	Reference identifier	C	an..70	M	n3	Code indicating the specific usage of the manifest information. **707 Use for BIP only** **929 Generate SumA only** **355 EXS (Export/Transshpment Export only for PoD Bremen/Bremerhaven/Wilhelmshaven)** **401 BHT Transshipment Order (Export/ Transshipment Export only for PoD Bremen/Bremerhaven/Wilhelmshaven)**
1156	Document line identifier	C	an..6	N		Not used
4000	Reference version identifier	C	an..35	N		Not used
1060	Revision identifier	C	an..6	N		Not used

Remark:

Example:

```
RFF+BGM:929'
```

No = Consecutive segment number
MaxOcc = Maximum occurrence of the segment/group
Counter = Counter of segment/group within the standard

St = Status
EDIFACT: M=Mandatory, C=Conditional
User specific: R=Required, O=Optional, D=Dependent, A=Advised, N=Not used

Counter	No	Tag	St	MaxOcc	Level	Name
0180		**SG3**	C	99	1	**RFF**
0190	19	**RFF**	M	1	1	**Indicator for generation of Re-Export Notification/EXS**

Beschreibung: Segment RFF+CUSmight be used to specify whether a re-export notification or EXS should be triggered automatically. If the segment is not provided, no message will be generated.

		Standard		Implementation		
Tag	Name	St	Format	St	Format	Usage / Remark
RFF						
C506	Reference	M		M		
1153	Reference code qualifier	M	an..3	M	an..3	**CUS Customs message indicator**
1154	Reference identifier	C	an..70	M	n1	**1 Generate Re-Export Notification/EXS** **0 Do not generate Re-Export Notification/EXS** Code indicating whether to automatically generate a Re-Export Notification resp. Exit Summary Declaration to customs or not. Value '1' is allowed only in case of Transshipments or Export (see RFF+DIR). If segment RFF+CUS isn't present, value '0' will be assumed.
1156	Document line identifier	C	an..6	N		Not used
4000	Reference version identifier	C	an..35	N		Not used
1060	Revision identifier	C	an..6	N		Not used

Remark:

Example:

```
RFF+CUS:1'
```

No = Consecutive segment number
MaxOcc = Maximum occurrence of the segment/group
Counter = Counter of segment/group within the standard

St = Status
EDIFACT: M=Mandatory, C=Conditional
User specific: R=Required, O=Optional, D=Dependent, A=Advised, N=Not used

Counter	No	Tag	St	MaxOcc	Level	Name
0180		**SG3**	D	1	1	**RFF**
0190	20	**RFF**	M	1	1	**Reference / Local Reference Number of original declaration**

Beschreibung: Mandatory for Updates (BGM.1225 = 5)

		Standard		Implementation		
Tag	Name	St	Format	St	Format	Usage / Remark
RFF						
C506	Reference	M		M		
1153	Reference code qualifier	M	an..3	M	an..3	**ACW Reference number to previous message**
1154	Reference identifier	C	an..70	M	an..35	For IMP: When sending updates, this field is meant to contain the local reference number (BGM Element 1004) of the original message. For BIP: This segment will be used only if BIP can't determine the original message by the provided reference number in the BGM segment. When sending updates, the local reference number of the original message should be provided in the same BGM segment (Element 1004) again - the reference should never change.
1156	Document line identifier	C	an..6	N		Not used
4000	Reference version identifier	C	an..35	N		Not used
1060	Revision identifier	C	an..6	N		Not used

Remark:

Example:

```
RFF+ACW:201049516472'
```

No = Consecutive segment number
MaxOcc = Maximum occurrence of the segment/group
Counter = Counter of segment/group within the standard

St = Status
EDIFACT: M=Mandatory, C=Conditional
User specific: R=Required, O=Optional, D=Dependent, A=Advised, N=Not used

Counter	No	Tag	St	MaxOcc	Level	Name
0180		**SG3**	D	1	1	**RFF**
0190	21	**RFF**	M	1	1	**ID of previous customs declaration**

Beschreibung:

		Standard		Implementation		
Tag	Name	St	Format	St	Format	Usage / Remark
RFF						
C506	Reference	M		M		
1153	Reference code qualifier	M	an..3	M	an..3	In order to harmonise the interface, the qualifier AEI has been introduced. AEI and MRN may be used synonymously. Since the qualifier "MRN" will be removed in later versions, the usage of "AEI" is recommended. **MRN Mailing reference number** **AEI Registration number of previous Customs declaration**
1154	Reference identifier	C	an..70	R	an..35	Previous document number (MRN) or exemption **Field (SumA):** Previous document number an..30, if previous document type = OESUMA, in all other cases an18 (MRN) OESUMA: an..30 (reason for exemption As of Feb 1st, 2020 the reason for exemption must be entered as follows: RFF+AEI:Art.136 UZK u Art. 104 UZK-DA::OESUMA
1156	Document line identifier	C	an..6	N		Element not used on B/L level. Not used
4000	Reference version identifier	C	an..35	D	a..6	**ESUMA MRN of an Entry Summary Declaration** **OESUMA If no ENS declaration is available, the reason for the exemption has to be entered.** **Previous document type** Other previous document types are only to be used on GID level
1060	Revision identifier	C	an..6	N		Not used

Remark:
Mandatory for third country goods, for which an ENS has been lodged. If goods have been moved under the Community transit procedure, the corresponding MRN has to be entered.

Example 1: Segments both on Header- and GID level

SG3 (B/L level) RFF+AEI:10DE321012345678I8'
SG22 (GID) GID+1...
RFF+AEI::1'
....
GID+2..
RFF+AEI::3'

Example 2: Segments only on GID level (recommended)

SG3 (B/L level) -
SG22 (GID) GID+1...
RFF+AEI:10DE321012345678I8:1'
....
GID+2..
RFF+AEI:10DE321012345678I8:3'

Example:
```
RFF+AEI:11DE32101234567898::ESUMA'
RFF+AEI:Art.136 UZK u Art. 104 UZK-DA::OESUMA
```

No = Consecutive segment number
MaxOcc = Maximum occurrence of the segment/group
Counter = Counter of segment/group within the standard

St = Status
EDIFACT: M=Mandatory, C=Conditional
User specific: R=Required, O=Optional, D=Dependent, A=Advised, N=Not used

Counter	No	Tag	St	MaxOcc	Level	Name
0180		**SG3**	C	1	1	**RFF**

For IMP only: Declare ATB number for breakbulk at this level. For containerized goods provide the ATB number in SG 35.
This segment ist not used for the BIP platform.

0190	22	**RFF**	M	1	1	**Customs Reference to summary declaration**

Beschreibung: Must be provided when using the IFTMCS to update an existing summary declaration of temporary storage.

		Standard		Implementation		
Tag	Name	St	Format	St	Format	Usage / Remark
RFF						
C506	Reference	M		M		
1153	Reference code qualifier	M	an..3	M	an..3	**XC Cargo control number**
1154	Reference identifier	C	an..70	M	an..21	**Field (SumA):** ID Reg-No ATLAS (SumA) **Remark (SumA):** ATB Number. Mandatory when updating orconfirming an existing preliminary/ partially confirmed SumA. **Field (ZAPP):** Registration number of previous summary declaration of temporary storage **Remark (ZAPP):** If no registration number is provided, this will be interpreted as "A summary declaration of temporary storage was not required"
1156	Document line identifier	C	an..6	C	n..3	
4000	Reference version identifier	C	an..35	N		Not used
1060	Revision identifier	C	an..6	N		Not used

Remark:

Example:

```
RFF+XC:ATB120005410540540:1'
```

No = Consecutive segment number
MaxOcc = Maximum occurrence of the segment/group
Counter = Counter of segment/group within the standard

St = Status
EDIFACT: M=Mandatory, C=Conditional
User specific: R=Required, O=Optional, D=Dependent, A=Advised, N=Not used

Counter	No	Tag	St	MaxOcc	Level	Name
0180		**SG3**	C	1	1	**RFF**
		This segment is IMP relevant only. Though BIP accepts the segment, it ignores the data.				
0190	23	**RFF**	M	1	1	**On Carriage Instructions**

Beschreibung:

		Standard		Implementation		
Tag	Name	St	Format	St	Format	Usage / Remark
RFF						
C506	Reference	M		M		
1153	Reference code qualifier	M	an..3	M	an..3	**030 Generate messages regarding the oncarriage**
1154	Reference identifier	C	an..70	R	an..17	Generate Import Operation Instruction - If element 1154 of RFF+IOI is set to 1, IMP shall generate an Import Operation Instruction on behalf of the Carrier (i.e. the Carrier will act in the role of the Forwarder for this IOI). **TA Generate Transport Order** **IOI Generate Import Operation Instruction** **ALL Generate all messages (Import Operation Instruction and Transportorder)**
1156	Document line identifier	C	an..6	N		Not used
4000	Reference version identifier	C	an..35	N		Not used
1060	Revision identifier	C	an..6	N		Not used

Remark:

Example:

```
RFF+030:IOI'
```

No = Consecutive segment number
MaxOcc = Maximum occurrence of the segment/group
Counter = Counter of segment/group within the standard

St = Status
EDIFACT: M=Mandatory, C=Conditional
User specific: R=Required, O=Optional, D=Dependent, A=Advised, N=Not used

Counter	No	Tag	St	MaxOcc	Level	Name
0460		**SG8**	M	99	1	**TDT-SG9-SG10**
0470	24	**TDT**	M	1	1	**Vessel Information**

Beschreibung:

		Standard		Implementation		
Tag	Name	St	Format	St	Format	Usage / Remark
TDT						
8051	Transport stage code qualifier	M	an..3	M	an..3	**20 Main-carriage transport**
8028	Means of transport journey identifier	C	an..17	M	an..17	
C220	Mode of transport	C		D		
8067	Transport mode name code	C	an..3	M	an..3	**1 Maritime transport** **Field (SumA):** Mode of transport at border **Remark (SumA):** Is also required entry (depending on other information in the SumA)
8066	Transport mode name	C	an..17	N		Not used
C228	Transport means	C		C		
8179	Transport means description code	C	an..8	C	an..8	**11 Ship** **Field (SumA):** Transport Means
8178	Transport means description	C	an..17	N		Not used
C040	Carrier	C		M		
3127	Carrier identifier	C	an..17	M	an..17	Carrier's SCAC Code
1131	Code list identification code	C	an..17	N		Not used
3055	Code list responsible agency code	C	an..3	N		Not used
3128	Carrier name	C	an..35	O	an..35	Carrier's name
8101	Transit direction indicator code	C	an..3	N		Not used
C401	Excess transportation information	C		N		
8457	Excess transportation reason code	M	an..3	N		Not used
8459	Excess transportation responsibility code	M	an..3	N		Not used
7130	Customer shipment authorisation identifier	C	an..17	N		Not used
C222	Transport identification	C		M		
8213	Transport means identification name identifier	C	an..9	M	an..9	IMO Number **Field (SumA):** Number of transport
1131	Code list identification code	C	an..17	N		Not used
3055	Code list responsible agency code	C	an..3	N		Not used
8212	Transport means identification name	C	an..35	M	an..35	Vessel name **Field (BHT):** Vessel name
8453	Transport means nationality code	C	an..3	M	a2	Nationality of the vessel
8281	Transport means ownership indicator code	C	an..3	N		Not used

Remark:

Example:

```
TDT+20+ABC0021W+1+11+CARR:::CARRIER+++9999999:::CARRIERS VESSEL:AD'
```

No = Consecutive segment number
MaxOcc = Maximum occurrence of the segment/group
Counter = Counter of segment/group within the standard

St = Status
EDIFACT: M=Mandatory, C=Conditional
User specific: R=Required, O=Optional, D=Dependent, A=Advised, N=Not used

Counter	No	Tag	St	MaxOcc	Level	Name
0500		**SG9**	M	1	2	**Information about the PoD**
0510	25	**LOC**	M	1	2	**Place/location identification**

Beschreibung:

		Standard		Implementation		
Tag	Name	St	Format	St	Format	Usage / Remark
LOC						
3227	Location function code qualifier	M	an..3	M	an..3	**11 Place/port of discharge**
C517	Location identification	C		M		
3225	Location name code	C	an..25	M	an5	Location code of port of discharge **Field (EXS):** Itinerary (Port of Discharge) **Field (BHT):** Port of Discharge
1131	Code list identification code	C	an..17	N		Not used
3055	Code list responsible agency code	C	an..3	N		Not used
3224	Location name	C	an..256	M	an..35	Name of port of discharge **Field (SumA):** Place of destination, if not transmitted on goods item level (LOC+7)
C519	Related location one identification	C		C		
3223	First related location name code	C	an..25	M	an..25	Code of berth at discharge location. Data from this IFTMCS message might be forwarded to the berth operator indicated here (e.g. if a discharge order should be generated or the summary declaration of temporary storage should be handled by the berth operator). If the IFTMCS ist sent to IMP, a DAKOSY terminal code must be used (complete list at: http://www.dakosy-direct.de). **C1 Eurogate MSC-Gate** **C2 Container Terminal Eurogate Bhv** **N1 Nordhafen BLG Automobile** **N2 Nordhafen BLG High & Heavy** **NT North Sea Terminal (NTB)** **KH Autoterminal Kaiserhafen** **CTW Container Terminal Wilhelmshaven**
1131	Code list identification code	C	an..17	N		Not used
3055	Code list responsible agency code	C	an..3	N		Not used
3222	First related location name	C	an..70	C	an..35	Name of the berth at the port of discharge
C553	Related location two identification	C		C		
3233	Second related location name code	C	an..25	O	a2	
1131	Code list identification code	C	an..17	N		Not used
3055	Code list responsible agency code	C	an..3	N		Not used
3232	Second related location name	C	an..70	N		Not used
5479	Relation code	C	an..3	D	an1	Indicator used to specify, if the customs office where the entry summary declaration is being delivered (port of discharge), actually is the first customs office of entry or a following customs office. The first customs office of entry, specified and declared (!) in LOC+41 is not relevant for the determination of the indicator. The customs office of entry, declared first, even remains unchanged in case of a change in rotation.

No = Consecutive segment number
MaxOcc = Maximum occurrence of the segment/group
Counter = Counter of segment/group within the standard

St = Status
EDIFACT: M=Mandatory, C=Conditional
User specific: R=Required, O=Optional, D=Dependent, A=Advised, N=Not used

		Standard	Implementation		
Tag	Name	St Format	St	Format	Usage / Remark
					Two scenarios are possible: 1) The first port actually entered on the route is e.g. NLRTM LOC+11+DEBRV:::BREMERHAVEN+C2:::CONTAINER TERMINAL 2+DE+N' synonymous with LOC+11+DEBRV:::BREMERHAVEN+C2:::CONTAINER TERMINAL 2+DE'. The omission of the element is interpreted as 'N'. 2) After changing the route Bremerhaven is being entered as first Port in Europe, in other words, Bremerhaven is the actual (!) first customs office of entry. LOC+11+DEBRV:::BREMERHAVEN+C2:::CONTAINER TERMINAL 2+DE+J' **J Port of Discharge is actual First Port of Entry.** **N Port of Discharge is NOT First Port of Entry** **Indicator actual first customs office of entry**

Remark:

Example:

```
LOC+11+DEBRV:::BREMERHAVEN+C1:::CONTAINER TERMINAL 1+DE+N'
```

No = Consecutive segment number
MaxOcc = Maximum occurrence of the segment/group
Counter = Counter of segment/group within the standard

St = Status
EDIFACT: M=Mandatory, C=Conditional
User specific: R=Required, O=Optional, D=Dependent, A=Advised, N=Not used

Counter	No	Tag	St	MaxOcc	Level	Name
0500		**SG9**	M	1	2	**Information about the PoD**
0520	26	**DTM**	M	1	3	**Date/time/period**

Beschreibung:

		Standard		Implementation		
Tag	Name	St	Format	St	Format	Usage / Remark
DTM						
C507	Date/time/period	M		M		
2005	Date or time or period function code qualifier	M	an..3	M	an..3	**132 Arrival date/time, estimated**
2380	Date or time or period value	C	an..35	M	n8	ETA Place of Discharge **Field (SumA):** Date of presentation
2379	Date or time or period format code	C	an..3	M	n3	**102 CCYYMMDD**

Remark:

Example:

```
DTM+132:20100914:102'
```

No = Consecutive segment number
MaxOcc = Maximum occurrence of the segment/group
Counter = Counter of segment/group within the standard

St = Status
EDIFACT: M=Mandatory, C=Conditional
User specific: R=Required, O=Optional, D=Dependent, A=Advised, N=Not used

Counter	No	Tag	St	MaxOcc	Level	Name
0500		**SG9**	M	1	2	**Information about the PoD**
0520	27	**DTM**	O	9	3	**Date/time/period**

Beschreibung:

		Standard		Implementation		
Tag	Name	St	Format	St	Format	Usage / Remark
DTM						
C507	Date/time/period	M		M		
2005	Date or time or period function code qualifier	M	an..3	M	an..3	**133 Departure date/time, estimated**
2380	Date or time or period value	C	an..35	M	n8	
2379	Date or time or period format code	C	an..3	M	n3	**102 CCYYMMDD**

Remark:

Example:

```
DTM+133:20100915:102'
```

No = Consecutive segment number
MaxOcc = Maximum occurrence of the segment/group
Counter = Counter of segment/group within the standard

St = Status
EDIFACT: M=Mandatory, C=Conditional
User specific: R=Required, O=Optional, D=Dependent, A=Advised, N=Not used

Counter	No	Tag	St	MaxOcc	Level	Name
0500		**SG9**	D	97	2	**LOC**
		This segment is IMP relevant only. Though BIP accepts the segment, it ignores the data.				
0510	28	**LOC**	M	1	2	**Routing**

Beschreibung:
Remark (EHGE): Mandatory for EHGE, if the message sender is also the vessel operator.

		Standard		Implementation		
Tag	Name	St	Format	St	Format	Usage / Remark
LOC						
3227	Location function code qualifier	M	an..3	M	an..3	**92 Routing**
C517	Location identification	C		C		
3225	Location name code	C	an..25	C	an..5	
1131	Code list identification code	C	an..17	C	an..17	**139 Port**
3055	Code list responsible agency code	C	an..3	C	an..3	**6 UN/ECE (United Nations - Economic Commission for Europe)**
3224	Location name	C	an..256	N		Not used
C519	Related location one identification	C		N		
3223	First related location name code	C	an..25	N		Not used
1131	Code list identification code	C	an..17	N		Not used
3055	Code list responsible agency code	C	an..3	N		Not used
3222	First related location name	C	an..70	N		Not used
C553	Related location two identification	C		N		
3233	Second related location name code	C	an..25	N		Not used
1131	Code list identification code	C	an..17	N		Not used
3055	Code list responsible agency code	C	an..3	N		Not used
3232	Second related location name	C	an..70	N		Not used
5479	Relation code	C	an..3	R	n3	**Remark (EHGE):** Position within the rotation

Remark:

Example:
```
LOC+92+HKHKG:139:6+++002'
```

No = Consecutive segment number
MaxOcc = Maximum occurrence of the segment/group
Counter = Counter of segment/group within the standard

St = Status
EDIFACT: M=Mandatory, C=Conditional
User specific: R=Required, O=Optional, D=Dependent, A=Advised, N=Not used

Counter	No	Tag	St	MaxOcc	Level	Name
0500		**SG9**	M	1	2	**Information about the PoL**

Remark: This segment group is mandatory if the IFTMCS is used as an export manifest (RFF+DIR = 'TSE' or 'E').

0510	29	**LOC**	M	1	2	**Place/location identification**

Beschreibung:

		Standard		Implementation		
Tag	Name	St	Format	St	Format	Usage / Remark
LOC						
3227	Location function code qualifier	M	an..3	M	an..3	**9 Place/port of loading**
C517	Location identification	C		M		
3225	Location name code	C	an..25	M	an5	Location code of port of loading **Field (EXS):** Itinerary (Port of Loading) **Field (BHT):** Port of Loading
1131	Code list identification code	C	an..17	N		Not used
3055	Code list responsible agency code	C	an..3	N		Not used
3224	Location name	C	an..256	M	an..35	Name of port of loading **Feld (SumA):** Beladeort **Field (SumA):** Place of loading
C519	Related location one identification	C		C		
3223	First related location name code	C	an..25	M	an..25	Code of berth at loading location. Data from this IFTMCS message might be forwarded to the berth operator indicated here (e.g. if a loading order should be generated). If the IFTMCS ist sent to IMP, a DAKOSY terminal code must be used (complete list at: http://www.dakosy-direct.de). **C1 Eurogate MSC-Gate** **C2 Container Terminal Eurogate Bhv** **N1 Nordhafen BLG Automobile** **N2 Nordhafen BLG High & Heavy** **NT North Sea Terminal (NTB)** **KH Autoterminal Kaiserhafen** **CTW Container Terminal Wilhelmshaven** **Field (BHT):** Terminal code
1131	Code list identification code	C	an..17	N		Not used
3055	Code list responsible agency code	C	an..3	N		Not used
3222	First related location name	C	an..70	C	an..35	Name of the berth at the port of loading
C553	Related location two identification	C		C		
3233	Second related location name code	C	an..25	D	a2	**Field (SumA):** Country of export (differing from port of loading)
1131	Code list identification code	C	an..17	N		Not used
3055	Code list responsible agency code	C	an..3	N		Not used
3232	Second related location name	C	an..70	N		Not used
5479	Relation code	C	an..3	N		Not used

Remark:

Example:

```
LOC+9+USCHI:::CHICAGO+C2:::CONTAINER TERMINAL 2+US'
```

No = Consecutive segment number
MaxOcc = Maximum occurrence of the segment/group
Counter = Counter of segment/group within the standard

St = Status
EDIFACT: M=Mandatory, C=Conditional
User specific: R=Required, O=Optional, D=Dependent, A=Advised, N=Not used

Counter	No	Tag	St	MaxOcc	Level	Name
0500		**SG9**	M	1	2	**Information about the PoL**

Remark: This segment group is mandatory if the IFTMCS is used as an export manifest (RFF+DIR = 'TSE' or 'E').

0520	30	**DTM**	C	1	3	**Date/time/period**

Beschreibung:

		Standard		Implementation		
Tag	Name	St	Format	St	Format	Usage / Remark
DTM						
C507	Date/time/period	M		M		
2005	Date or time or period function code qualifier	M	an..3	M	an..3	**186 Departure date/time, actual**
2380	Date or time or period value	C	an..35	M	n8	
2379	Date or time or period format code	C	an..3	M	n3	**102 CCYYMMDD**

Remark:

Example:

```
DTM+186:20100906:102'
```

No = Consecutive segment number
MaxOcc = Maximum occurrence of the segment/group
Counter = Counter of segment/group within the standard

St = Status
EDIFACT: M=Mandatory, C=Conditional
User specific: R=Required, O=Optional, D=Dependent, A=Advised, N=Not used

Counter	No	Tag	St	MaxOcc	Level	Name
0500		**SG9**	M	1	2	**Information about the PoL**

Remark: This segment group is mandatory if the IFTMCS is used as an export manifest (RFF+DIR = 'TSE' or 'E').

0520	31	**DTM**	C	1	3	**Date/time/period**

Beschreibung:

Mandatory for export manifests.

		Standard		Implementation		
Tag	Name	St	Format	St	Format	Usage / Remark
DTM						
C507	Date/time/period	M		M		
2005	Date or time or period function code qualifier	M	an..3	M	an..3	**133 Departure date/time, estimated**
2380	Date or time or period value	C	an..35	M	n8	**Field (BHT):** ETS
2379	Date or time or period format code	C	an..3	M	n3	**102 CCYYMMDD**

Remark:

Example:

```
DTM+133:20110706:102'
```

No = Consecutive segment number
MaxOcc = Maximum occurrence of the segment/group
Counter = Counter of segment/group within the standard

St = Status
EDIFACT: M=Mandatory, C=Conditional
User specific: R=Required, O=Optional, D=Dependent, A=Advised, N=Not used

Counter	No	Tag	St	MaxOcc	Level	Name
0500		**SG9**	C	2	2	**LOC**

Information about the final port of discharge can be provided here if not TDT+30 (on carriage information) is submitted.

0510	32	**LOC**	M	1	2	**Place/location identification**

Beschreibung:

		Standard		Implementation		
Tag	Name	St	Format	St	Format	Usage / Remark
LOC						
3227	Location function code qualifier	M	an..3	M	an..3	**170 Final port of discharge**
C517	Location identification	C		C		
3225	Location name code	C	an..25	M	an5	Location code of final destination **Field (EXS):** Itinerary (Port of Discharge)
1131	Code list identification code	C	an..17	N		Not used
3055	Code list responsible agency code	C	an..3	N		Not used
3224	Location name	C	an..256	M	an..35	Name of port of final destination.
C519	Related location one identification	C		N		
3223	First related location name code	C	an..25	N		Not used
1131	Code list identification code	C	an..17	N		Not used
3055	Code list responsible agency code	C	an..3	N		Not used
3222	First related location name	C	an..70	N		Not used
C553	Related location two identification	C		N		
3233	Second related location name code	C	an..25	N		Not used
1131	Code list identification code	C	an..17	N		Not used
3055	Code list responsible agency code	C	an..3	N		Not used
3232	Second related location name	C	an..70	N		Not used
5479	Relation code	C	an..3	N		Not used

Remark:

Example:

```
LOC+170+USDET:::DETROIT'
```

No = Consecutive segment number
MaxOcc = Maximum occurrence of the segment/group
Counter = Counter of segment/group within the standard

St = Status
EDIFACT: M=Mandatory, C=Conditional
User specific: R=Required, O=Optional, D=Dependent, A=Advised, N=Not used

Counter	No	Tag	St	MaxOcc	Level	Name
0500		**SG9**	C	1	2	**Information about the first customs office at entry**

First Customs office at entry - ID of customs office where the goods enter the EU. This segment group is mandatory
if the MRN of an entry summary declaration is provided on header- or on goods item level
This segment group can be omitted for export manifests.

0510	33	**LOC**	M	1	2	**Place/location identification**

Beschreibung:

		Standard		Implementation		
Tag	Name	St	Format	St	Format	Usage / Remark
LOC						
3227	Location function code qualifier	M	an..3	M	an..3	**41 Customs office of entry**
C517	Location identification	C		M		
3225	Location name code	C	an..25	M	an8	List of customs office codes available at: http://ec.europa.eu/taxation_customs/dds/csrdhome_en.htm **Field (SumA):** First customs office of entry
1131	Code list identification code	C	an..17	N		Not used
3055	Code list responsible agency code	C	an..3	N		Not used
3224	Location name	C	an..256	N		Not used
C519	Related location one identification	C		N		
3223	First related location name code	C	an..25	N		Not used
1131	Code list identification code	C	an..17	N		Not used
3055	Code list responsible agency code	C	an..3	N		Not used
3222	First related location name	C	an..70	N		Not used
C553	Related location two identification	C		N		
3233	Second related location name code	C	an..25	N		Not used
1131	Code list identification code	C	an..17	N		Not used
3055	Code list responsible agency code	C	an..3	N		Not used
3232	Second related location name	C	an..70	N		Not used
5479	Relation code	C	an..3	M	an..3	**0 For Entry customs office** **1 For no entry customs office**

Remark:

Example:

```
LOC+41+NL035411+++0'
```

No = Consecutive segment number
MaxOcc = Maximum occurrence of the segment/group
Counter = Counter of segment/group within the standard

St = Status
EDIFACT: M=Mandatory, C=Conditional
User specific: R=Required, O=Optional, D=Dependent, A=Advised, N=Not used

Counter	No	Tag	St	MaxOcc	Level	Name
0500		**SG9**	C	1	2	**Information about the first customs office at entry**

First Customs office at entry - ID of customs office where the goods enter the EU. This segment group is mandatory
if the MRN of an entry summary declaration is provided on header- or on goods item level
This segment group can be omitted for export manifests.

0520	34	**DTM**	C	9	3	**Date/time/period**

Beschreibung:

		Standard		Implementation		
Tag	Name	St	Format	St	Format	Usage / Remark
DTM						
C507	Date/time/period	M		M		
2005	Date or time or period function code qualifier	M	an..3	M	an..3	**132 Arrival date/time, estimated**
2380	Date or time or period value	C	an..35	M	n12	
2379	Date or time or period format code	C	an..3	M	n3	**203 CCYYMMDDHHMM**

Remark:

Example:

```
DTM+132:201009111223:203'
```

No = Consecutive segment number
MaxOcc = Maximum occurrence of the segment/group
Counter = Counter of segment/group within the standard

St = Status
EDIFACT: M=Mandatory, C=Conditional
User specific: R=Required, O=Optional, D=Dependent, A=Advised, N=Not used

Counter	No	Tag	St	MaxOcc	Level	Name
0530		**SG10**	C	1	2	**RFF**
0540	35	**RFF**	M	1	2	**Reference**

Beschreibung:

		Standard		Implementation		
Tag	Name	St	Format	St	Format	Usage / Remark
RFF						
C506	Reference	M		M		
1153	Reference code qualifier	M	an..3	M	an..3	**VM Vessel identification**
1154	Reference identifier	C	an..70	M	an..7	Callsign of the vessel.
1156	Document line identifier	C	an..6	N		Not used
4000	Reference version identifier	C	an..35	N		Not used
1060	Revision identifier	C	an..6	N		Not used

Remark:

Example:

```
RFF+VM:V612F'
```

No = Consecutive segment number
MaxOcc = Maximum occurrence of the segment/group
Counter = Counter of segment/group within the standard

St = Status
EDIFACT: M=Mandatory, C=Conditional
User specific: R=Required, O=Optional, D=Dependent, A=Advised, N=Not used

Counter	No	Tag	St	MaxOcc	Level	Name
0530		**SG10**	C	1	2	**RFF**
0540	36	**RFF**	M	1	2	**DAKOSY- or SIS Voyage Number**

Beschreibung:

		Standard		Implementation		
Tag	Name	St	Format	St	Format	Usage / Remark
RFF						
C506	Reference	M		M		
1153	Reference code qualifier	M	an..3	M	an..3	**SIS SIS Voyage Reference** **DAK DAKOSY Voyage Reference**
1154	Reference identifier	C	an..70	M	an..70	**Remark (SIS):** Format: an..7 Position 1-4: SIS number of the voyage in the SIS system Position 5-6: Item No. of the Port of Call/Port of Destination in the declared SIS voyage (optional) Position 7: Carrier identification. Constant value of '1'. (optional) **Field (BHT):** SIS number
1156	Document line identifier	C	an..6	N		Not used
4000	Reference version identifier	C	an..35	N		Not used
1060	Revision identifier	C	an..6	N		Not used

Remark:

Example:

```
RFF+SIS:FH3D051'
```

No = Consecutive segment number
MaxOcc = Maximum occurrence of the segment/group
Counter = Counter of segment/group within the standard

St = Status
EDIFACT: M=Mandatory, C=Conditional
User specific: R=Required, O=Optional, D=Dependent, A=Advised, N=Not used

Counter	No	Tag	St	MaxOcc	Level	Name
0460		**SG8**	C	99	1	**TDT-SG9-SG10**
0470	37	**TDT**	M	1	1	**Details of transport**

Beschreibung:

		Standard		Implementation		
Tag	Name	St	Format	St	Format	Usage / Remark
TDT						
8051	Transport stage code qualifier	M	an..3	M	an..3	**30 On-carriage transport**
8028	Means of transport journey identifier	C	an..17	N		Not used
C220	Mode of transport	C		M		
8067	Transport mode name code	C	an..3	M	n1	**1 Maritime transport** **2 Rail transport** **3 Road transport** **4 Air transport** **8 Inland water transport**
8066	Transport mode name	C	an..17	N		Not used
C228	Transport means	C		N		
8179	Transport means description code	C	an..8	N		Not used
8178	Transport means description	C	an..17	N		Not used
C040	Carrier	C		C		
3127	Carrier identifier	C	an..17	C	an..17	SCAC Code of On Carriage Operator
1131	Code list identification code	C	an..17	N		Not used
3055	Code list responsible agency code	C	an..3	N		Not used
3128	Carrier name	C	an..35	N		Not used
8101	Transit direction indicator code	C	an..3	N		Not used
C401	Excess transportation information	C		N		
8457	Excess transportation reason code	M	an..3	N		Not used
8459	Excess transportation responsibility code	M	an..3	N		Not used
7130	Customer shipment authorisation identifier	C	an..17	N		Not used
C222	Transport identification	C		C		
8213	Transport means identification name identifier	C	an..9	N		Not used
1131	Code list identification code	C	an..17	N		Not used
3055	Code list responsible agency code	C	an..3	N		Not used
8212	Transport means identification name	C	an..35	C	an..35	Vessel Name (On Carriage) **Attention:** Please note for IMP: **Field (ZAPP):** Vessel name **Status (TA):** D **Remark (TA):** Required if on-carriage is managed by vessel
8453	Transport means nationality code	C	an..3	N		Not used
8281	Transport means ownership indicator code	C	an..3	N		Not used

Remark:

No = Consecutive segment number
MaxOcc = Maximum occurrence of the segment/group
Counter = Counter of segment/group within the standard

St = Status
EDIFACT: M=Mandatory, C=Conditional
User specific: R=Required, O=Optional, D=Dependent, A=Advised, N=Not used

Example:

```
TDT+30++1++CARR+++:::ONCARRIAGE VESSEL'
```

No = Consecutive segment number
MaxOcc = Maximum occurrence of the segment/group
Counter = Counter of segment/group within the standard

St = Status
EDIFACT: M=Mandatory, C=Conditional
User specific: R=Required, O=Optional, D=Dependent, A=Advised, N=Not used

Counter	No	Tag	St	MaxOcc	Level	Name
0500		**SG9**	C	99	2	**LOC-DTM**
0510	38	**LOC**	M	1	2	**Place/location identification**

Beschreibung:

		Standard		Implementation		
Tag	Name	St	Format	St	Format	Usage / Remark
LOC						
3227	Location function code qualifier	M	an..3	M	an..3	**170 Final port of discharge**
C517	Location identification	C		M		
3225	Location name code	C	an..25	C	an5	**Field (EXS):** Itinerary (Port of Discharge) **Field (ZAPP):** Port of Discharge (UN LoCode)
1131	Code list identification code	C	an..17	N		Not used
3055	Code list responsible agency code	C	an..3	N		Not used
3224	Location name	C	an..256	M	an..256	**Field (ZAPP):** Port of Discharge (Name) **Remark (ZAPP):** While the name of the port of discharge must be provided, the UN Location Code is optional
C519	Related location one identification	C		N		
3223	First related location name code	C	an..25	N		Not used
1131	Code list identification code	C	an..17	N		Not used
3055	Code list responsible agency code	C	an..3	N		Not used
3222	First related location name	C	an..70	N		Not used
C553	Related location two identification	C		N		
3233	Second related location name code	C	an..25	N		Not used
1131	Code list identification code	C	an..17	N		Not used
3055	Code list responsible agency code	C	an..3	N		Not used
3232	Second related location name	C	an..70	N		Not used
5479	Relation code	C	an..3	N		Not used

Remark:

Example:

```
LOC+170+INBOM:::MUMBAI'
```

No = Consecutive segment number
MaxOcc = Maximum occurrence of the segment/group
Counter = Counter of segment/group within the standard

St = Status
EDIFACT: M=Mandatory, C=Conditional
User specific: R=Required, O=Optional, D=Dependent, A=Advised, N=Not used

Counter	No	Tag	St	MaxOcc	Level	Name
0500		**SG9**	C	99	2	**LOC-DTM**
0520	39	**DTM**	C	9	3	**Date/time/period**

Beschreibung:

		Standard		Implementation		
Tag	Name	St	Format	St	Format	Usage / Remark
DTM						
C507	Date/time/period	M		M		
2005	Date or time or period function code qualifier	M	an..3	M	an..3	**133 Departure date/time, estimated**
2380	Date or time or period value	C	an..35	M	n12	**Field (ZAPP):** Departure date **Remark (ZAPP):** This is the date of the departure FROM HAMBURG to the port provided in LOC+170 **Field (EXS):** Departure date
2379	Date or time or period format code	C	an..3	M	n3	**203 CCYYMMDDHHMM** **102 CCYYMMDD**

Remark:

Example:

```
DTM+133:201010241625:203'
```

No = Consecutive segment number
MaxOcc = Maximum occurrence of the segment/group
Counter = Counter of segment/group within the standard

St = Status
EDIFACT: M=Mandatory, C=Conditional
User specific: R=Required, O=Optional, D=Dependent, A=Advised, N=Not used

Counter	No	Tag	St	MaxOcc	Level	Name
0530		**SG10**	C	1	2	**RFF**
0540	40	**RFF**	M	1	2	**DAKOSY- or SIS Voyage Number**

Beschreibung:

		Standard		Implementation		
Tag	Name	St	Format	St	Format	Usage / Remark
RFF						
C506	Reference	M		M		
1153	Reference code qualifier	M	an..3	M	an..3	**SIS SIS Voyage Reference** **DAK DAKOSY Voyage Reference**
1154	Reference identifier	C	an..70	M	an..70	
1156	Document line identifier	C	an..6	N		Not used
4000	Reference version identifier	C	an..35	N		Not used
1060	Revision identifier	C	an..6	N		Not used

Remark:

Example:

```
RFF+SIS:E483'
```

No = Consecutive segment number
MaxOcc = Maximum occurrence of the segment/group
Counter = Counter of segment/group within the standard

St = Status
EDIFACT: M=Mandatory, C=Conditional
User specific: R=Required, O=Optional, D=Dependent, A=Advised, N=Not used

Counter	No	Tag	St	MaxOcc	Level	Name
0560		**SG11**	M	1	1	**NAD-SG12**
0570	41	**NAD**	M	1	1	**Information about the presenter / the company lodging the declaration**

Beschreibung: Message Sender - equal to the company lodging a declaration. Information about a person responsible for the declaration has to be provided in segment NAD+PK.

		Standard		Implementation		
Tag	Name	St	Format	St	Format	Usage / Remark
NAD						
3035	Party function code qualifier	M	an..3	M	an..3	**MS Document/message issuer/sender**
C082	Party identification details	C		N		
3039	Party identifier	M	an..35	M	an..17	**Field (SumA):** Presenter's TIN **Remark (SumA):** If the message sender does have a german TIN/EORI, it should be filled in here. In this case, the message sender's address information will be ignored. **Field (EXS):** Person Lodging the Declaration
1131	Code list identification code	C	an..17	N		Not used
3055	Code list responsible agency code	C	an..3	N		Not used
C058	Name and address	C		C		
3124	Name and address description	M	an..35	M	an..17	**EORI**
3124	Name and address description	C	an..35	D	n4	Office number (0000 - 9999). Default value is 0000, if the element is missing. **Office number**
3124	Name and address description	C	an..35	N		Not used
3124	Name and address description	C	an..35	N		Not used
3124	Name and address description	C	an..35	N		Not used
C080	Party name	C		D		
3036	Party name	M	an..35	M	an..35	**Field (SumA):** Company Name (Presenter) Part 1 **Field (ZAPP):** Company which files the declaration (Company Name, Part 1)
3036	Party name	C	an..35	C	an..35	**Field (SumA):** Company Name (Presenter) Part 2 **Field (ZAPP):** Company which files the declaration (Company Name, Part 2)
3036	Party name	C	an..35	C	an..35	**Field (SumA):** Company Name (Presenter) Part 3 **Field (ZAPP):** Company which files the declaration (Company Name, Part 3)
3036	Party name	C	an..35	N		Not used
3036	Party name	C	an..35	N		Not used
3045	Party name format code	C	an..3	N		Not used
C059	Street	C		C		
3042	Street and number or post office box identifier	M	an..35	M	an..35	**Field (SumA):** Street and Number (Presenter) **Remark (SumA):** Mandatory if no TIN or EORI is specified **Field (ZAPP):** Company which files the declaration (Street)
3042	Street and number or post office box identifier	C	an..35	C	an..35	**Field (SumA):** City District (Presenter)
3042	Street and number or post office box identifier	C	an..35	N		Not used
3042	Street and number or post office box identifier	C	an..35	N		Not used
3164	City name	C	an..35	D	an..35	**Field (SumA):** City (Presenter)

No = Consecutive segment number
MaxOcc = Maximum occurrence of the segment/group
Counter = Counter of segment/group within the standard

St = Status
EDIFACT: M=Mandatory, C=Conditional
User specific: R=Required, O=Optional, D=Dependent, A=Advised, N=Not used

		Standard		Implementation		
Tag	Name	St	Format	St	Format	Usage / Remark
						Remark (SumA): Mandatory if no TIN or EORI is specified **Field (ZAPP):** Company which files the declaration (City)
C819	Country sub-entity details	C		N		
3229	Country sub-entity name code	C	an..9	N		Not used
1131	Code list identification code	C	an..17	N		Not used
3055	Code list responsible agency code	C	an..3	N		Not used
3228	Country sub-entity name	C	an..35	N		Not used
3251	Postal identification code	C	an..17	D	an..17	**Field (SumA):** ZIP Code (Presenter) **Remark (SumA):** Mandatory if no TIN or EORI is specified and country code (element 3207) is 'DE'
3207	Country name code	C	an..3	D	an..3	**Field (SumA):** Country/Country Code (Presenter) **Remark (SumA):** Mandatory if no TIN or EORI is specified **Field (ZAPP):** Company which files the declaration (Country)

Remark:

Example:

```
NAD+MS++DE870515478:1111+PRESENTER:COMPANY:DE+ABC-STRASSE 32:ORTSTEIL+GESTELLSTADT++12345+DE'
```

No = Consecutive segment number
MaxOcc = Maximum occurrence of the segment/group
Counter = Counter of segment/group within the standard

St = Status
EDIFACT: M=Mandatory, C=Conditional
User specific: R=Required, O=Optional, D=Dependent, A=Advised, N=Not used

Counter	No	Tag	St	MaxOcc	Level	Name
0600		**SG12**	C	1	2	**CTA-COM**
0610	42	**CTA**	M	1	2	**Contact information**

Beschreibung:

		Standard		Implementation		
Tag	Name	St	Format	St	Format	Usage / Remark
CTA						
3139	Contact function code	C	an..3	M	an..3	**IC Information contact**
C056	Department or employee details	C		M		
3413	Department or employee name code	C	an..17	N		Not used
3412	Department or employee name	C	an..35	M	an..35	

Remark:

Example:

```
CTA+IC+:Mr. X'
```

No = Consecutive segment number
MaxOcc = Maximum occurrence of the segment/group
Counter = Counter of segment/group within the standard

St = Status
EDIFACT: M=Mandatory, C=Conditional
User specific: R=Required, O=Optional, D=Dependent, A=Advised, N=Not used

Counter	No	Tag	St	MaxOcc	Level	Name
0600		**SG12**	C	1	2	**CTA-COM**
0620	43	**COM**	C	9	3	**Communication contact**

Beschreibung:

		Standard		Implementation		
Tag	Name	St	Format	St	Format	Usage / Remark
COM						
C076	Communication contact	M		M		
3148	Communication address identifier	M	an..512	M	an..512	
3155	Communication address code qualifier	M	an..3	M	an..3	**TE Telephone** **FX Telefax** **EM Electronic mail**

Remark:

Example:

```
COM+040370030:TE'
```

No = Consecutive segment number
MaxOcc = Maximum occurrence of the segment/group
Counter = Counter of segment/group within the standard

St = Status
EDIFACT: M=Mandatory, C=Conditional
User specific: R=Required, O=Optional, D=Dependent, A=Advised, N=Not used

Counter	No	Tag	St	MaxOcc	Level	Name
0560		**SG11**	C	1	1	**NAD-SG12**
0570	44	**NAD**	M	1	1	**Information about the carrier**

Beschreibung:

		Standard		Implementation		
Tag	Name	St	Format	St	Format	Usage / Remark
NAD						
3035	Party function code qualifier	M	an..3	M	an..3	**CG Carrier's agent**
C082	Party identification details	C		N		
3039	Party identifier	M	an..35	N		Not used
1131	Code list identification code	C	an..17	N		Not used
3055	Code list responsible agency code	C	an..3	N		Not used
C058	Name and address	C		N		
3124	Name and address description	M	an..35	N		Not used
3124	Name and address description	C	an..35	N		Not used
3124	Name and address description	C	an..35	N		Not used
3124	Name and address description	C	an..35	N		Not used
3124	Name and address description	C	an..35	N		Not used
C080	Party name	C		C		
3036	Party name	M	an..35	M	an..35	
3036	Party name	C	an..35	N		Not used
3036	Party name	C	an..35	N		Not used
3036	Party name	C	an..35	N		Not used
3036	Party name	C	an..35	N		Not used
3045	Party name format code	C	an..3	N		Not used
C059	Street	C		C		
3042	Street and number or post office box identifier	M	an..35	M	an..35	
3042	Street and number or post office box identifier	C	an..35	N		Not used
3042	Street and number or post office box identifier	C	an..35	N		Not used
3042	Street and number or post office box identifier	C	an..35	N		Not used
3164	City name	C	an..35	C	an..35	
C819	Country sub-entity details	C		N		
3229	Country sub-entity name code	C	an..9	N		Not used
1131	Code list identification code	C	an..17	N		Not used
3055	Code list responsible agency code	C	an..3	N		Not used
3228	Country sub-entity name	C	an..35	N		Not used
3251	Postal identification code	C	an..17	C	an..17	
3207	Country name code	C	an..3	C	an..3	

Remark:

Example:

```
NAD+CG+++CARRIER COMPANY+WINROAD 21+HONGKONG++123450+CN'
```

No = Consecutive segment number
MaxOcc = Maximum occurrence of the segment/group
Counter = Counter of segment/group within the standard

St = Status
EDIFACT: M=Mandatory, C=Conditional
User specific: R=Required, O=Optional, D=Dependent, A=Advised, N=Not used

Counter	No	Tag	St	MaxOcc	Level	Name
0600		**SG12**	C	1	2	**CTA-COM**
0610	45	**CTA**	M	1	2	**Contact information**

Beschreibung:

		Standard		Implementation		
Tag	Name	St	Format	St	Format	Usage / Remark
CTA						
3139	Contact function code	C	an..3	M	an..3	**IC Information contact**
C056	Department or employee details	C		M		
3413	Department or employee name code	C	an..17	N		Not used
3412	Department or employee name	C	an..35	M	an..35	Contact person or department at the carrier resp. the carrier's agent.

Remark:

Example:

```
CTA+IC+:Mr. Y'
```

No = Consecutive segment number
MaxOcc = Maximum occurrence of the segment/group
Counter = Counter of segment/group within the standard

St = Status
EDIFACT: M=Mandatory, C=Conditional
User specific: R=Required, O=Optional, D=Dependent, A=Advised, N=Not used

Counter	No	Tag	St	MaxOcc	Level	Name
0600		**SG12**	C	1	2	**CTA-COM**
0620	46	**COM**	C	9	3	**Communication contact**

Beschreibung:

		Standard		Implementation		
Tag	Name	St	Format	St	Format	Usage / Remark
COM						
C076	Communication contact	M		M		
3148	Communication address identifier	M	an..512	M	an..512	
3155	Communication address code qualifier	M	an..3	M	an..3	**TE Telephone** **FX Telefax** **EM Electronic mail**

Remark:

Example:

```
COM+0023 456-78:TE'
```

No = Consecutive segment number
MaxOcc = Maximum occurrence of the segment/group
Counter = Counter of segment/group within the standard

St = Status
EDIFACT: M=Mandatory, C=Conditional
User specific: R=Required, O=Optional, D=Dependent, A=Advised, N=Not used

Counter	No	Tag	St	MaxOcc	Level	Name
0560		**SG11**	M	1	1	**NAD**
0570	47	**NAD**	M	1	1	**Information about the shipper/consignor**

Beschreibung:

		Standard		Implementation		
Tag	Name	St	Format	St	Format	Usage / Remark
NAD						
3035	Party function code qualifier	M	an..3	M	an..3	**CZ Consignor**
C082	Party identification details	C		N		
3039	Party identifier	M	an..35	N		Not used
1131	Code list identification code	C	an..17	N		Not used
3055	Code list responsible agency code	C	an..3	N		Not used
C058	Name and address	C		C		
3124	Name and address description	M	an..35	M	an..17	**EORI**
3124	Name and address description	C	an..35	D	n4	Office number (0000 - 9999). Default value is 0000, if the element is missing. **Office number**
3124	Name and address description	C	an..35	N		Not used
3124	Name and address description	C	an..35	N		Not used
3124	Name and address description	C	an..35	N		Not used
C080	Party name	C		C		
3036	Party name	M	an..35	M	an..35	**Field (ZAPP):** Consignor (Name) **Field (EXS):** Consignor (Name)
3036	Party name	C	an..35	N		Not used
3036	Party name	C	an..35	N		Not used
3036	Party name	C	an..35	N		Not used
3036	Party name	C	an..35	N		Not used
3045	Party name format code	C	an..3	N		Not used
C059	Street	C		C		
3042	Street and number or post office box identifier	M	an..35	M	an..35	**Field (ZAPP):** Consignor (Street) **Field (EXS):** Consignor (Street)
3042	Street and number or post office box identifier	C	an..35	N		Not used
3042	Street and number or post office box identifier	C	an..35	N		Not used
3042	Street and number or post office box identifier	C	an..35	N		Not used
3164	City name	C	an..35	D	an..35	**Field (ZAPP):** Consignor (City) **Field (EXS):** Consignor (City) Mandatory, if values should be used for an EXS declaration.
C819	Country sub-entity details	C		N		
3229	Country sub-entity name code	C	an..9	N		Not used
1131	Code list identification code	C	an..17	N		Not used
3055	Code list responsible agency code	C	an..3	N		Not used
3228	Country sub-entity name	C	an..35	N		Not used
3251	Postal identification code	C	an..17	D	an..17	**Field (EXS):** Consignor (ZIP code) **Remark (EXS):** Mandatory if the IFTMCS is used for creation of an EXS declaration. For german cities, the correspondent five digit code must be transmitted (Format: n5).

No = Consecutive segment number
MaxOcc = Maximum occurrence of the segment/group
Counter = Counter of segment/group within the standard

St = Status
EDIFACT: M=Mandatory, C=Conditional
User specific: R=Required, O=Optional, D=Dependent, A=Advised, N=Not used

		Standard		Implementation	
Tag	Name	St	Format	St	Format	Usage / Remark
						For all other countries, either a ZIP code - if available or present - or the value "n.a." (if ZIP code unknown or not available) must be provided.
3207	Country name code	C	an..3	D	an..3	**Field (ZAPP):** Consignor (Country) **Field (EXS):** Consignor (Country) Mandatory, if values should be used for an EXS declaration.

Remark:

Example:

```
NAD+CZ++NL454545555:2222+Shipping Company+40 Zhengu Road+Hong Kong++12345+CN'
```

No = Consecutive segment number
MaxOcc = Maximum occurrence of the segment/group
Counter = Counter of segment/group within the standard

St = Status
EDIFACT: M=Mandatory, C=Conditional
User specific: R=Required, O=Optional, D=Dependent, A=Advised, N=Not used

Counter	No	Tag	St	MaxOcc	Level	Name
0560		**SG11**	M	1	1	**NAD**
0570	48	**NAD**	M	1	1	**Information about the consignee**

Beschreibung:

		Standard		Implementation		
Tag	Name	St	Format	St	Format	Usage / Remark
NAD						
3035	Party function code qualifier	M	an..3	M	an..3	**CN Consignee**
C082	Party identification details	C		N		
3039	Party identifier	M	an..35	N		Not used
1131	Code list identification code	C	an..17	N		Not used
3055	Code list responsible agency code	C	an..3	N		Not used
C058	Name and address	C		C		
3124	Name and address description	M	an..35	M	an..17	**EORI**
3124	Name and address description	C	an..35	D	n4	Office number (0000 - 9999). Default value is 0000, if the element is missing. **Office number**
3124	Name and address description	C	an..35	N		Not used
3124	Name and address description	C	an..35	N		Not used
3124	Name and address description	C	an..35	N		Not used
C080	Party name	C		D		
3036	Party name	M	an..35	M	an..35	**Field (BHT):** Consignee (Name) **Field (ZAPP):** Consignee (Name) **Field (EXS):** Consignee (Name)
3036	Party name	C	an..35	N		Not used
3036	Party name	C	an..35	N		Not used
3036	Party name	C	an..35	N		Not used
3036	Party name	C	an..35	N		Not used
3045	Party name format code	C	an..3	N		Not used
C059	Street	C		D		
3042	Street and number or post office box identifier	M	an..35	M	an..35	**Field (BHT):** Consignee (Street) **Field (ZAPP):** Consignee (Street) **Field (EXS):** Consignee (Street)
3042	Street and number or post office box identifier	C	an..35	N		Not used
3042	Street and number or post office box identifier	C	an..35	N		Not used
3042	Street and number or post office box identifier	C	an..35	N		Not used
3164	City name	C	an..35	D	an..35	Mandatory, if values should be used for an EXS declaration. **Field (BHT):** Consignee (City) **Field (ZAPP):** Consignee (City) **Field (EXS):** Consignee (City)
C819	Country sub-entity details	C		N		
3229	Country sub-entity name code	C	an..9	N		Not used
1131	Code list identification code	C	an..17	N		Not used
3055	Code list responsible agency code	C	an..3	N		Not used
3228	Country sub-entity name	C	an..35	N		Not used
3251	Postal identification code	C	an..17	D	an..17	**Field (EXS):** Consignee (ZIP code) **Remark (EXS):** Mandatory if the IFTMCS is used for creation of an EXS declaration.

No = Consecutive segment number
MaxOcc = Maximum occurrence of the segment/group
Counter = Counter of segment/group within the standard

St = Status
EDIFACT: M=Mandatory, C=Conditional
User specific: R=Required, O=Optional, D=Dependent, A=Advised, N=Not used

		Standard		Implementation		
Tag	Name	St	Format	St	Format	Usage / Remark
						For german cities, the correspondent five digit code must be transmitted (Format: n5). For all other countries, either a ZIP code - if available or present - or the value "n.a." (if ZIP code unknown or not available) must be provided.
3207	Country name code	C	an..3	D	an..3	Mandatory, if values should be used for an EXS declaration. **Field (BHT):** Consignee (Country) **Field (ZAPP):** Consignee (Country) **Field (EXS):** Consignee (Country)

Remark:

Example:

```
NAD+CN++DE454554500000002:0000+EMPFAENGER GMBH+STRASSE 72+DRESDEN++01900+DE'
```

No = Consecutive segment number
MaxOcc = Maximum occurrence of the segment/group
Counter = Counter of segment/group within the standard

St = Status
EDIFACT: M=Mandatory, C=Conditional
User specific: R=Required, O=Optional, D=Dependent, A=Advised, N=Not used

Counter	No	Tag	St	MaxOcc	Level	Name
0600		**SG12**	C	9	2	**CTA-COM**
		Notification contact				
0610	49	**CTA**	M	1	2	**Contact information**

Beschreibung:

		Standard		Implementation		
Tag	Name	St	Format	St	Format	Usage / Remark
CTA						
3139	Contact function code	C	an..3	C	an..3	**NT Notification contact**
C056	Department or employee details	C		N		
3413	Department or employee name code	C	an..17	N		Not used
3412	Department or employee name	C	an..35	N		Not used

Remark:

Example:

```
CTA+NT'
```

No = Consecutive segment number
MaxOcc = Maximum occurrence of the segment/group
Counter = Counter of segment/group within the standard

St = Status
EDIFACT: M=Mandatory, C=Conditional
User specific: R=Required, O=Optional, D=Dependent, A=Advised, N=Not used

Counter	No	Tag	St	MaxOcc	Level	Name
0600		**SG12**	C	9	2	**CTA-COM**
		Notification contact				
0620	50	**COM**	R	9	3	**Communication contact**

Beschreibung:

		Standard		Implementation		
Tag	Name	St	Format	St	Format	Usage / Remark
COM						
C076	Communication contact	M		M		
3148	Communication address identifier	M	an..512	M	an..512	
3155	Communication address code qualifier	M	an..3	M	an..3	**EM Electronic mail**

Remark:

Example:

```
COM+someone@dbh.de:EM'
```

No = Consecutive segment number
MaxOcc = Maximum occurrence of the segment/group
Counter = Counter of segment/group within the standard

St = Status
EDIFACT: M=Mandatory, C=Conditional
User specific: R=Required, O=Optional, D=Dependent, A=Advised, N=Not used

Counter	No	Tag	St	MaxOcc	Level	Name
0600		**SG12**	C	9	2	**CTA-COM**
		Consignee's contact				
0610	51	**CTA**	M	1	2	**Contact information**

Beschreibung:

		Standard		Implementation		
Tag	Name	St	Format	St	Format	Usage / Remark
CTA						
3139	Contact function code	C	an..3	C	an..3	**CN Consignee**
C056	Department or employee details	C		R		
3413	Department or employee name code	C	an..17	N		Not used
3412	Department or employee name	C	an..35	R	an..35	

Remark:

Example:

```
CTA+CN+:PETER MEIER'
```

No = Consecutive segment number
MaxOcc = Maximum occurrence of the segment/group
Counter = Counter of segment/group within the standard

St = Status
EDIFACT: M=Mandatory, C=Conditional
User specific: R=Required, O=Optional, D=Dependent, A=Advised, N=Not used

Counter	No	Tag	St	MaxOcc	Level	Name
0600		**SG12**	C	9	2	**CTA-COM**
		Consignee's contact				
0620	52	**COM**	C	9	3	**Communication contact**

Beschreibung:

		Standard		Implementation		
Tag	Name	St	Format	St	Format	Usage / Remark
COM						
C076	Communication contact	M		M		
3148	Communication address identifier	M	an..512	M	an..512	
3155	Communication address code qualifier	M	an..3	M	an..3	**EM Electronic mail** **TE Telephone** **FX Telefax**

Remark:

Example:

```
COM+X:EM'
```

No = Consecutive segment number
MaxOcc = Maximum occurrence of the segment/group
Counter = Counter of segment/group within the standard

St = Status
EDIFACT: M=Mandatory, C=Conditional
User specific: R=Required, O=Optional, D=Dependent, A=Advised, N=Not used

Counter	No	Tag	St	MaxOcc	Level	Name
0560		**SG11**	C	1	1	**NAD**
0570	53	**NAD**	M	1	1	**Notify Party**

Beschreibung:

		Standard		Implementation		
Tag	Name	St	Format	St	Format	Usage / Remark
NAD						
3035	Party function code qualifier	M	an..3	M	an..3	**N1 Notify party no. 1**
C082	Party identification details	C		N		
3039	Party identifier	M	an..35	N		Not used
1131	Code list identification code	C	an..17	N		Not used
3055	Code list responsible agency code	C	an..3	N		Not used
C058	Name and address	C		N		
3124	Name and address description	M	an..35	N		Not used
3124	Name and address description	C	an..35	N		Not used
3124	Name and address description	C	an..35	N		Not used
3124	Name and address description	C	an..35	N		Not used
3124	Name and address description	C	an..35	N		Not used
C080	Party name	C		D		
3036	Party name	M	an..35	M	an..35	
3036	Party name	C	an..35	N		Not used
3036	Party name	C	an..35	N		Not used
3036	Party name	C	an..35	N		Not used
3036	Party name	C	an..35	N		Not used
3045	Party name format code	C	an..3	N		Not used
C059	Street	C		C		
3042	Street and number or post office box identifier	M	an..35	M	an..35	
3042	Street and number or post office box identifier	C	an..35	N		Not used
3042	Street and number or post office box identifier	C	an..35	N		Not used
3042	Street and number or post office box identifier	C	an..35	N		Not used
3164	City name	C	an..35	C	an..35	
C819	Country sub-entity details	C		N		
3229	Country sub-entity name code	C	an..9	N		Not used
1131	Code list identification code	C	an..17	N		Not used
3055	Code list responsible agency code	C	an..3	N		Not used
3228	Country sub-entity name	C	an..35	N		Not used
3251	Postal identification code	C	an..17	C	an..17	
3207	Country name code	C	an..3	C	an..3	

Remark:

Example:

```
NAD+N1+++VERGISSMEINNICHT AG+EINESTRASSE 99+LEIPZIG++01300+DE'
```

No = Consecutive segment number
MaxOcc = Maximum occurrence of the segment/group
Counter = Counter of segment/group within the standard

St = Status
EDIFACT: M=Mandatory, C=Conditional
User specific: R=Required, O=Optional, D=Dependent, A=Advised, N=Not used

Counter	No	Tag	St	MaxOcc	Level	Name
0560		**SG11**	C	1	1	**NAD**
		Attention: The values submitted in this segment are accepted by dbh, but NOT used for the Summary Declaration.				
0570	54	**NAD**	M	1	1	**Information about the representative**

Beschreibung:

		Standard		Implementation		
Tag	Name	St	Format	St	Format	Usage / Remark
NAD						
3035	Party function code qualifier	M	an..3	M	an..3	**AG Agent/representative**
C082	Party identification details	C		N		
3039	Party identifier	M	an..35	M	an..35	**Field (SumA):** Entitled Disposition Party (TIN) Will be removed in future versions. The usage of EORI and office number is recommended.
1131	Code list identification code	C	an..17	N		Not used
3055	Code list responsible agency code	C	an..3	N		Not used
C058	Name and address	C		D		
3124	Name and address description	M	an..35	M	an..17	**EORI**
3124	Name and address description	C	an..35	D	n4	Office number (0000 - 9999). Default value is 0000, if the element is missing. **Office number**
3124	Name and address description	C	an..35	N		Not used
3124	Name and address description	C	an..35	N		Not used
3124	Name and address description	C	an..35	N		Not used
C080	Party name	C		N		
3036	Party name	M	an..35	N		Not used
3036	Party name	C	an..35	N		Not used
3036	Party name	C	an..35	N		Not used
3036	Party name	C	an..35	N		Not used
3036	Party name	C	an..35	N		Not used
3045	Party name format code	C	an..3	N		Not used
C059	Street	C		N		
3042	Street and number or post office box identifier	M	an..35	N		Not used
3042	Street and number or post office box identifier	C	an..35	N		Not used
3042	Street and number or post office box identifier	C	an..35	N		Not used
3042	Street and number or post office box identifier	C	an..35	N		Not used
3164	City name	C	an..35	N		Not used
C819	Country sub-entity details	C		N		
3229	Country sub-entity name code	C	an..9	N		Not used
1131	Code list identification code	C	an..17	N		Not used
3055	Code list responsible agency code	C	an..3	N		Not used
3228	Country sub-entity name	C	an..35	N		Not used
3251	Postal identification code	C	an..17	N		Not used
3207	Country name code	C	an..3	N		Not used

Remark:

Example:

```
NAD+AG++DE566565656655555:0002'
```

No = Consecutive segment number
MaxOcc = Maximum occurrence of the segment/group
Counter = Counter of segment/group within the standard

St = Status
EDIFACT: M=Mandatory, C=Conditional
User specific: R=Required, O=Optional, D=Dependent, A=Advised, N=Not used

Counter	No	Tag	St	MaxOcc	Level	Name
0560		**SG11**	C	1	1	**NAD-SG15**

This occurence of SG11 has to be used when using the IFTMCS for the Summary Declaration only.

0570	55	**NAD**	M	1	1	**Warehouse Keeper**

Beschreibung:

		Standard		Implementation		
Tag	Name	St	Format	St	Format	Usage / Remark
NAD						
3035	Party function code qualifier	M	an..3	M	an..3	**SN Store keeper**
C082	Party identification details	C		N		Must be sent, if C058 is missing. Will be removed in a future version.
3039	Party identifier	M	an..35	M	an..35	**Field (SumA):** Temporary Storage Keeper (TIN)
1131	Code list identification code	C	an..17	N		Not used
3055	Code list responsible agency code	C	an..3	N		Not used
C058	Name and address	C		C		Must be sent, if C082 is missing. Will become mandatory in a future version.
3124	Name and address description	M	an..35	M	an..17	**EORI**
3124	Name and address description	C	an..35	D	n4	Office number (0000 - 9999). Default value is 0000, if the element is missing. **Office number**
3124	Name and address description	C	an..35	N		Not used
3124	Name and address description	C	an..35	N		Not used
3124	Name and address description	C	an..35	N		Not used
C080	Party name	C		N		
3036	Party name	M	an..35	N		Not used
3036	Party name	C	an..35	N		Not used
3036	Party name	C	an..35	N		Not used
3036	Party name	C	an..35	N		Not used
3036	Party name	C	an..35	N		Not used
3045	Party name format code	C	an..3	N		Not used
C059	Street	C		N		
3042	Street and number or post office box identifier	M	an..35	N		Not used
3042	Street and number or post office box identifier	C	an..35	N		Not used
3042	Street and number or post office box identifier	C	an..35	N		Not used
3042	Street and number or post office box identifier	C	an..35	N		Not used
3164	City name	C	an..35	N		Not used
C819	Country sub-entity details	C		N		
3229	Country sub-entity name code	C	an..9	N		Not used
1131	Code list identification code	C	an..17	N		Not used
3055	Code list responsible agency code	C	an..3	N		Not used
3228	Country sub-entity name	C	an..35	N		Not used
3251	Postal identification code	C	an..17	N		Not used
3207	Country name code	C	an..3	N		Not used

Remark:
Either TIN or EORI must be sent.

Example:
```
NAD+SN++DE12345678901:0001'
```

No = Consecutive segment number
MaxOcc = Maximum occurrence of the segment/group
Counter = Counter of segment/group within the standard

St = Status
EDIFACT: M=Mandatory, C=Conditional
User specific: R=Required, O=Optional, D=Dependent, A=Advised, N=Not used

Counter	No	Tag	St	MaxOcc	Level	Name
0740		**SG15**	M	9	2	**RFF**
0750	56	**RFF**	M	1	2	**Storage Location**

Beschreibung:

		Standard		Implementation		
Tag	Name	St	Format	St	Format	Usage / Remark
RFF						
C506	Reference	M		M		
1153	Reference code qualifier	M	an..3	M	an..3	**WS Warehouse storage location number**
1154	Reference identifier	C	an..70	M	an..70	Code of the storage location
1156	Document line identifier	C	an..6	N		Not used
4000	Reference version identifier	C	an..35	N		Not used
1060	Revision identifier	C	an..6	N		Not used

Remark:

Example:

```
RFF+WS:1'
```

No = Consecutive segment number
MaxOcc = Maximum occurrence of the segment/group
Counter = Counter of segment/group within the standard

St = Status
EDIFACT: M=Mandatory, C=Conditional
User specific: R=Required, O=Optional, D=Dependent, A=Advised, N=Not used

Counter	No	Tag	St	MaxOcc	Level	Name
0560		**SG11**	C	1	1	**NAD-SG12**

This occurence of SG11 must be used when using the IFTMCS for the summary declaration of temporary storage, for the exit summary declaration or for a ZAPP filing of type MIT.

0570	57	**NAD**	M	1	1	**Information about the person lodging a declaration**

Beschreibung:

		Standard		Implementation		
Tag	Name	St	Format	St	Format	Usage / Remark
NAD						
3035	Party function code qualifier	M	an..3	M	an..3	**PK Contact party**
C082	Party identification details	C		N		
3039	Party identifier	M	an..35	N		Not used
1131	Code list identification code	C	an..17	N		Not used
3055	Code list responsible agency code	C	an..3	N		Not used
C058	Name and address	C		C		
3124	Name and address description	M	an..35	M	an..35	The elements 3124 within this segment have to be used to submit the contact person's name. **Field (SumA):** Name of contact person (Part 1) **Remark (SumA):** Person responsible at the presenter or software provider (if applicable) **Field (ZAPP):** Name of person filing ZAPP submission (Part 1)
3124	Name and address description	C	an..35	C	an..35	The elements 3124 within this segment have to be used to submit the contact person's name. **Field (SumA):** Name of contact person (Part 2) **Remark (SumA):** Person responsible at the presenter or software provider (if applicable) **Field (ZAPP):** Name of person filing ZAPP submission (Part 2)
3124	Name and address description	C	an..35	C	an..35	The elements 3124 within this segment have to be used to submit the contact person's name. **Field (SumA):** Name of contact person (Part 3) **Remark (SumA):** Person responsible at the presenter or software provider (if applicable) **Field (ZAPP):** Name of person filing ZAPP submission (Part 3)
3124	Name and address description	C	an..35	N		Not used
3124	Name and address description	C	an..35	N		Not used
C080	Party name	C		M		
3036	Party name	M	an..35	M	an..35	The elements 3036 within this segment have to be used to submit the contact person's rank within the company. **Field (SumA):** Rank within company (Part 1) **Remark (SumA):** Rank of the person responsible at the presenter or software provider (if applicable)
3036	Party name	C	an..35	C	an..35	The elements 3036 within this segment have to be used to submit the contact person's rank within the company. **Field (SumA):** Rank within company (Part 2) **Remark (SumA):** Rank of the person responsible at the presenter or software provider (if applicable)
3036	Party name	C	an..35	C	an..35	The elements 3036 within this segment have to be used to submit the contact person's rank within the company.

No = Consecutive segment number
MaxOcc = Maximum occurrence of the segment/group
Counter = Counter of segment/group within the standard

St = Status
EDIFACT: M=Mandatory, C=Conditional
User specific: R=Required, O=Optional, D=Dependent, A=Advised, N=Not used

		Standard		Implementation		
Tag	Name	St	Format	St	Format	Usage / Remark
						Field (SumA): Rank within company (Part 3) **Remark (SumA):** Rank of the person responsible at the presenter or software provider (if applicable)
3036	Party name	C	an..35	N		Not used
3036	Party name	C	an..35	N		Not used
3045	Party name format code	C	an..3	N		Not used
C059	Street	C		N		
3042	Street and number or post office box identifier	M	an..35	N		Not used
3042	Street and number or post office box identifier	C	an..35	N		Not used
3042	Street and number or post office box identifier	C	an..35	N		Not used
3042	Street and number or post office box identifier	C	an..35	N		Not used
3164	City name	C	an..35	N		Not used
C819	Country sub-entity details	C		N		
3229	Country sub-entity name code	C	an..9	N		Not used
1131	Code list identification code	C	an..17	N		Not used
3055	Code list responsible agency code	C	an..3	N		Not used
3228	Country sub-entity name	C	an..35	N		Not used
3251	Postal identification code	C	an..17	N		Not used
3207	Country name code	C	an..3	N		Not used

Remark:

Example:

```
NAD+PK++Paul Meier:abc:def+Prokurist:ghi:jkl'
```

No = Consecutive segment number
MaxOcc = Maximum occurrence of the segment/group
Counter = Counter of segment/group within the standard

St = Status
EDIFACT: M=Mandatory, C=Conditional
User specific: R=Required, O=Optional, D=Dependent, A=Advised, N=Not used

Counter	No	Tag	St	MaxOcc	Level	Name
0600		**SG12**	M	9	2	**CTA-COM**
0610	58	**CTA**	M	1	2	**Contact information**

Beschreibung:

		Standard		Implementation		
Tag	Name	St	Format	St	Format	Usage / Remark
CTA						
3139	Contact function code	C	an..3	C	an..3	**IC Information contact**
C056	Department or employee details	C		N		
3413	Department or employee name code	C	an..17	N		Not used
3412	Department or employee name	C	an..35	N		Not used

Remark:

Example:

```
CTA+IC'
```

No = Consecutive segment number
MaxOcc = Maximum occurrence of the segment/group
Counter = Counter of segment/group within the standard

St = Status
EDIFACT: M=Mandatory, C=Conditional
User specific: R=Required, O=Optional, D=Dependent, A=Advised, N=Not used

Counter	No	Tag	St	MaxOcc	Level	Name
0600		**SG12**	M	9	2	**CTA-COM**
0620	59	**COM**	M	9	3	**Contact details of responsible Person**

Beschreibung:

		Standard		Implementation		
Tag	Name	St	Format	St	Format	Usage / Remark
COM						
C076	Communication contact	M		M		
3148	Communication address identifier	M	an..512	M	an..512	Contact details of responsible person **Feld (ZAPP):** Phone-/Fax-/E-Mail of person filing ZAPP submission. **Remark (ZAPP):** At least the phone number must be provided
3155	Communication address code qualifier	M	an..3	M	an..3	**TE Telephone** **FX Telefax** **EM Electronic mail**

Remark:

Example:

```
COM+04211234560:TE'
```

No = Consecutive segment number
MaxOcc = Maximum occurrence of the segment/group
Counter = Counter of segment/group within the standard

St = Status
EDIFACT: M=Mandatory, C=Conditional
User specific: R=Required, O=Optional, D=Dependent, A=Advised, N=Not used

Counter	No	Tag	St	MaxOcc	Level	Name
0560		**SG11**	D	1	1	**NAD**
0570	60	**NAD**	M	1	1	**Vessel Operator**

Beschreibung:
Remark (EHGE): This segment is IMP relevant only. Though BIP accepts the segment, it ignores the data.
Mandatory if the values should be used for the creation of an EHGE.

		Standard		Implementation		
Tag	Name	St	Format	St	Format	Usage / Remark
NAD						
3035	Party function code qualifier	M	an..3	M	an..3	**CPE Vessel master**
C082	Party identification details	C		C		
3039	Party identifier	M	an..35	M	an4	
1131	Code list identification code	C	an..17	N		Not used
3055	Code list responsible agency code	C	an..3	N		Not used
C058	Name and address	C		N		
3124	Name and address description	M	an..35	N		Not used
3124	Name and address description	C	an..35	N		Not used
3124	Name and address description	C	an..35	N		Not used
3124	Name and address description	C	an..35	N		Not used
3124	Name and address description	C	an..35	N		Not used
C080	Party name	C		N		
3036	Party name	M	an..35	N		Not used
3036	Party name	C	an..35	N		Not used
3036	Party name	C	an..35	N		Not used
3036	Party name	C	an..35	N		Not used
3036	Party name	C	an..35	N		Not used
3045	Party name format code	C	an..3	N		Not used
C059	Street	C		N		
3042	Street and number or post office box identifier	M	an..35	N		Not used
3042	Street and number or post office box identifier	C	an..35	N		Not used
3042	Street and number or post office box identifier	C	an..35	N		Not used
3042	Street and number or post office box identifier	C	an..35	N		Not used
3164	City name	C	an..35	N		Not used
C819	Country sub-entity details	C		N		
3229	Country sub-entity name code	C	an..9	N		Not used
1131	Code list identification code	C	an..17	N		Not used
3055	Code list responsible agency code	C	an..3	N		Not used
3228	Country sub-entity name	C	an..35	N		Not used
3251	Postal identification code	C	an..17	N		Not used
3207	Country name code	C	an..3	N		Not used

Remark:

Example:
```
NAD+CPE+HJCU'
```

No = Consecutive segment number
MaxOcc = Maximum occurrence of the segment/group
Counter = Counter of segment/group within the standard

St = Status
EDIFACT: M=Mandatory, C=Conditional
User specific: R=Required, O=Optional, D=Dependent, A=Advised, N=Not used

Counter	No	Tag	St	MaxOcc	Level	Name
0890		**SG18**	M	999	1	**GID-TMP-RNG-LOC-PIA-FTX-SG20-SG22-SG23-SG24-SG27-S30**
0900	61	**GID**	M	1	1	**Package information**

Beschreibung:

		Standard		Implementation		
Tag	Name	St	Format	St	Format	Usage / Remark
GID						
1496	Goods item number	C	n..5	M	n..5	This is a sequential number starting with 1 and increased by 1 for each Goods Item (GID segment); 1, 2, 3...
C213	Number and type of packages	C		D		
7224	Package quantity	C	n..8	M	n..8	**Field (SumA):** Number of packages **Field (ZAPP):** Number of packages **Field (EXS):** Number of packages
7065	Package type description code	C	an..17	D	an..17	Code accd. Customs Codelist A1160 (german version as a part of the ATLAS guide at http://www.zoll.de/e0_downloads/edifact_release_8_4/index.html) **Field (SumA):** Type of Packages **Remark (SumA):** Mandatory for Summary Declaration **Field (EXS):** Type of Packages
1131	Code list identification code	C	an..17	N		Not used
3055	Code list responsible agency code	C	an..3	N		Not used
7064	Type of packages	C	an..35	C	an..35	
7233	Packaging related description code	C	an..3	C	an..3	
C213	Number and type of packages	C		N		
7224	Package quantity	C	n..8	N		Not used
7065	Package type description code	C	an..17	N		Not used
1131	Code list identification code	C	an..17	N		Not used
3055	Code list responsible agency code	C	an..3	N		Not used
7064	Type of packages	C	an..35	N		Not used
7233	Packaging related description code	C	an..3	N		Not used
C213	Number and type of packages	C		N		
7224	Package quantity	C	n..8	N		Not used
7065	Package type description code	C	an..17	N		Not used
1131	Code list identification code	C	an..17	N		Not used
3055	Code list responsible agency code	C	an..3	N		Not used
7064	Type of packages	C	an..35	N		Not used
7233	Packaging related description code	C	an..3	N		Not used
C213	Number and type of packages	C		N		
7224	Package quantity	C	n..8	N		Not used
7065	Package type description code	C	an..17	N		Not used
1131	Code list identification code	C	an..17	N		Not used
3055	Code list responsible agency code	C	an..3	N		Not used
7064	Type of packages	C	an..35	N		Not used
7233	Packaging related description code	C	an..3	N		Not used
C213	Number and type of packages	C		N		

No = Consecutive segment number
MaxOcc = Maximum occurrence of the segment/group
Counter = Counter of segment/group within the standard

St = Status
EDIFACT: M=Mandatory, C=Conditional
User specific: R=Required, O=Optional, D=Dependent, A=Advised, N=Not used

		Standard		Implementation		
Tag	Name	St	Format	St	Format	Usage / Remark
7224	Package quantity	C	n..8	N		Not used
7065	Package type description code	C	an..17	N		Not used
1131	Code list identification code	C	an..17	N		Not used
3055	Code list responsible agency code	C	an..3	N		Not used
7064	Type of packages	C	an..35	N		Not used
7233	Packaging related description code	C	an..3	N		Not used

Remark:

Example:

```
GID+1+9:1A1:::X:1'
```

No = Consecutive segment number
MaxOcc = Maximum occurrence of the segment/group
Counter = Counter of segment/group within the standard

St = Status
EDIFACT: M=Mandatory, C=Conditional
User specific: R=Required, O=Optional, D=Dependent, A=Advised, N=Not used

Counter	No	Tag	St	MaxOcc	Level	Name
0890		**SG18**	M	999	1	**GID-TMP-RNG-LOC-PIA-FTX-SG20-SG22-SG23-SG24-SG27-S30**
0920	62	**TMP**	C	1	2	**Temperature**

Beschreibung:

		Standard		Implementation		
Tag	Name	St	Format	St	Format	Usage / Remark
TMP						
6245	Temperature type code qualifier	M	an..3	M	n1	**2 Transport temperature**
C239	Temperature setting	C		M		
6246	Temperature value	C	n..15	M	n..5	
6411	Measurement unit code	C	an..3	M	a3	**CEL degree Celsius** **FAH degree Fahrenheit**

Remark:

Example:

```
TMP+2+9:CEL'
```

No = Consecutive segment number
MaxOcc = Maximum occurrence of the segment/group
Counter = Counter of segment/group within the standard

St = Status
EDIFACT: M=Mandatory, C=Conditional
User specific: R=Required, O=Optional, D=Dependent, A=Advised, N=Not used

Counter	No	Tag	St	MaxOcc	Level	Name
0890		**SG18**	M	999	1	**GID-TMP-RNG-LOC-PIA-FTX-SG20-SG22-SG23-SG24-SG27-S30**
0930	63	**RNG**	C	1	2	**Range details**

Beschreibung:

		Standard		Implementation		
Tag	Name	St	Format	St	Format	Usage / Remark
RNG						
6167	Range type code qualifier	M	an..3	M	an..3	**12 Transport temperature range**
C280	Range	C		M		
6411	Measurement unit code	M	an..3	M	an..3	**CEL degree Celsius** **FAH degree Fahrenheit**
6162	Range minimum value	C	n..18	M	n..18	
6152	Range maximum value	C	n..18	M	n..18	

Remark:

Example:

```
RNG+12+CEL:9:9'
```

No = Consecutive segment number
MaxOcc = Maximum occurrence of the segment/group
Counter = Counter of segment/group within the standard

St = Status
EDIFACT: M=Mandatory, C=Conditional
User specific: R=Required, O=Optional, D=Dependent, A=Advised, N=Not used

Counter	No	Tag	St	MaxOcc	Level	Name
0890		**SG18**	M	999	1	**GID-TMP-RNG-LOC-PIA-FTX-SG20-SG22-SG23-SG24-SG27-S30**
0950	64	**LOC**	D	1	2	**Country of origin**

Beschreibung:

		Standard		Implementation		
Tag	Name	St	Format	St	Format	Usage / Remark
LOC						
3227	Location function code qualifier	M	an..3	M	an..3	**27 Country of origin**
C517	Location identification	C		M		
3225	Location name code	C	an..25	M	a2	Country of Origin **Field (EXS):** Itinerary (Country of Origin) **Field (BHT):** Country of Origin **Field (ZAPP):** Country of Origin
1131	Code list identification code	C	an..17	N		Not used
3055	Code list responsible agency code	C	an..3	N		Not used
3224	Location name	C	an..256	N		Not used
C519	Related location one identification	C		N		
3223	First related location name code	C	an..25	N		Not used
1131	Code list identification code	C	an..17	N		Not used
3055	Code list responsible agency code	C	an..3	N		Not used
3222	First related location name	C	an..70	N		Not used
C553	Related location two identification	C		N		
3233	Second related location name code	C	an..25	N		Not used
1131	Code list identification code	C	an..17	N		Not used
3055	Code list responsible agency code	C	an..3	N		Not used
3232	Second related location name	C	an..70	N		Not used
5479	Relation code	C	an..3	N		Not used

Remark:

Example:

```
LOC+27+CN'
```

No = Consecutive segment number
MaxOcc = Maximum occurrence of the segment/group
Counter = Counter of segment/group within the standard

St = Status
EDIFACT: M=Mandatory, C=Conditional
User specific: R=Required, O=Optional, D=Dependent, A=Advised, N=Not used

Counter	No	Tag	St	MaxOcc	Level	Name
0890		**SG18**	M	999	1	**GID-TMP-RNG-LOC-PIA-FTX-SG20-SG22-SG23-SG24-SG27-S30**
0950	65	**LOC**	D	1	2	**Country of destination**

Beschreibung:
Remark (ZAPP): Required for the Re-Export notification (Transhipments)

		Standard		Implementation		
Tag	Name	St	Format	St	Format	Usage / Remark
LOC						
3227	Location function code qualifier	M	an..3	M	an..3	**28 Country of destination of goods**
C517	Location identification	C		M		
3225	Location name code	C	an..25	D	a2	Country of destination is required for Re-Export notifications sent to ZAPP. **Field (EXS):** Itinerary (Country of destination) **Field (BHT):** Country of destination **Field (ZAPP):** Country of destination
1131	Code list identification code	C	an..17	N		Not used
3055	Code list responsible agency code	C	an..3	N		Not used
3224	Location name	C	an..256	N		Not used
C519	Related location one identification	C		N		
3223	First related location name code	C	an..25	N		Not used
1131	Code list identification code	C	an..17	N		Not used
3055	Code list responsible agency code	C	an..3	N		Not used
3222	First related location name	C	an..70	N		Not used
C553	Related location two identification	C		N		
3233	Second related location name code	C	an..25	N		Not used
1131	Code list identification code	C	an..17	N		Not used
3055	Code list responsible agency code	C	an..3	N		Not used
3232	Second related location name	C	an..70	N		Not used
5479	Relation code	C	an..3	N		Not used

Remark:

Example:
```
LOC+28+IN'
```

No = Consecutive segment number
MaxOcc = Maximum occurrence of the segment/group
Counter = Counter of segment/group within the standard

St = Status
EDIFACT: M=Mandatory, C=Conditional
User specific: R=Required, O=Optional, D=Dependent, A=Advised, N=Not used

Counter	No	Tag	St	MaxOcc	Level	Name
0890		**SG18**	M	999	1	**GID-TMP-RNG-LOC-PIA-FTX-SG20-SG22-SG23-SG24-SG27-S30**
0950	66	**LOC**	D	1	2	**Place of (final) destination**

Beschreibung:

		Standard		Implementation		
Tag	Name	St	Format	St	Format	Usage / Remark
LOC						
3227	Location function code qualifier	M	an..3	M	an..3	**7 Place of delivery**
C517	Location identification	C		M		
3225	Location name code	C	an..25	N		Not used
1131	Code list identification code	C	an..17	N		Not used
3055	Code list responsible agency code	C	an..3	N		Not used
3224	Location name	C	an..256	M	an..35	Final destination of goods. **Field (SumA):** Final Destination
C519	Related location one identification	C		N		
3223	First related location name code	C	an..25	N		Not used
1131	Code list identification code	C	an..17	N		Not used
3055	Code list responsible agency code	C	an..3	N		Not used
3222	First related location name	C	an..70	N		Not used
C553	Related location two identification	C		N		
3233	Second related location name code	C	an..25	N		Not used
1131	Code list identification code	C	an..17	N		Not used
3055	Code list responsible agency code	C	an..3	N		Not used
3232	Second related location name	C	an..70	N		Not used
5479	Relation code	C	an..3	N		Not used

Remark:

Example:

```
LOC+7+:::MUENCHEN'
```

No = Consecutive segment number
MaxOcc = Maximum occurrence of the segment/group
Counter = Counter of segment/group within the standard

St = Status
EDIFACT: M=Mandatory, C=Conditional
User specific: R=Required, O=Optional, D=Dependent, A=Advised, N=Not used

Counter	No	Tag	St	MaxOcc	Level	Name
0890		**SG18**	M	999	1	**GID-TMP-RNG-LOC-PIA-FTX-SG20-SG22-SG23-SG24-SG27-S30**
0970	67	**PIA**	D	1	2	**Commodity code**

Beschreibung:

		Standard		Implementation		
Tag	Name	St	Format	St	Format	Usage / Remark
PIA						
4347	Product identifier code qualifier	M	an..3	M	an..3	**5 Product identification**
C212	Item number identification	M		M		
7140	Item identifier	C	an..35	M	n..10	Commodity code. For certain use cases the 8- or 10-digit-combined-nomenclature code is required, but usually the 4-digit-code will be sufficient. **Field (EXS):** Customs goods identity code (Format: n..8)
7143	Item type identification code	C	an..3	M	an..3	**HS Harmonised system**
1131	Code list identification code	C	an..17	N		Not used
3055	Code list responsible agency code	C	an..3	N		Not used
C212	Item number identification	C		N		
7140	Item identifier	C	an..35	N		Not used
7143	Item type identification code	C	an..3	N		Not used
1131	Code list identification code	C	an..17	N		Not used
3055	Code list responsible agency code	C	an..3	N		Not used
C212	Item number identification	C		N		
7140	Item identifier	C	an..35	N		Not used
7143	Item type identification code	C	an..3	N		Not used
1131	Code list identification code	C	an..17	N		Not used
3055	Code list responsible agency code	C	an..3	N		Not used
C212	Item number identification	C		N		
7140	Item identifier	C	an..35	N		Not used
7143	Item type identification code	C	an..3	N		Not used
1131	Code list identification code	C	an..17	N		Not used
3055	Code list responsible agency code	C	an..3	N		Not used
C212	Item number identification	C		N		
7140	Item identifier	C	an..35	N		Not used
7143	Item type identification code	C	an..3	N		Not used
1131	Code list identification code	C	an..17	N		Not used
3055	Code list responsible agency code	C	an..3	N		Not used

Remark:

Example:

```
PIA+5+1234:HS'
```

No = Consecutive segment number
MaxOcc = Maximum occurrence of the segment/group
Counter = Counter of segment/group within the standard

St = Status
EDIFACT: M=Mandatory, C=Conditional
User specific: R=Required, O=Optional, D=Dependent, A=Advised, N=Not used

Counter	No	Tag	St	MaxOcc	Level	Name
0890		**SG18**	M	999	1	**GID-TMP-RNG-LOC-PIA-FTX-SG20-SG22-SG23-SG24-SG27-S30**
0980	68	**FTX**	M	1	2	**Goods Description**

Beschreibung:

		Standard		Implementation		
Tag	Name	St	Format	St	Format	Usage / Remark
FTX						
4451	Text subject code qualifier	M	an..3	M	an..3	**AAA Goods description**
4453	Free text function code	C	an..3	N		Not used
C107	Text reference	C		N		Range of commodities The applicant is obliged to declare a particular range of commmodities by adding an identifier in case of goods that are subject to certain restrictions (VuB).
4441	Free text value code	M	an..17	M	an..17	**A Plants, plant products and other goods subject to measures of prohibition or restriction regarding to plant inspections.** **B Live animals** **C Dead animals or products of animal origin that have to be veterinary inspected.** **D Pharmaceutical/ anaesthethic products** **E Weapons and ammunition** **F Radioactive materials** **G Waste materials** **H Explosives, pyrotechnic articles and other goods subject to the Explosives Act** **I Chemicals, chemical substances or preparations subject to official movement restriction** **J Goods subject to criminal movement restrictions (e.g. media involving unconstitutional or prohibited pornography contents)** **K Plants, animals or other goods subject to measures of prohibition or restricition.** **Field (SumA):** Range of commodities
1131	Code list identification code	C	an..17	N		Not used
3055	Code list responsible agency code	C	an..3	N		Not used
C108	Text literal	C		M		
4440	Free text value	M	an..512	M	an..256	Goods Description. Please note that - depending on who is actually sending the SumA - only the first 140 characters might be used for the summary declaration of temporary storage. **Field (SumA):** Goods Description **Field (ZAPP):** Goods Description **Field (EXS):** Goods Description **Field (BHT):** Goods Description
4440	Free text value	C	an..512	N		Not used
4440	Free text value	C	an..512	N		Not used
4440	Free text value	C	an..512	N		Not used
4440	Free text value	C	an..512	N		Not used
3453	Language name code	C	an..3	N		Not used
4447	Free text format code	C	an..3	N		Not used

No = Consecutive segment number
MaxOcc = Maximum occurrence of the segment/group
Counter = Counter of segment/group within the standard

St = Status
EDIFACT: M=Mandatory, C=Conditional
User specific: R=Required, O=Optional, D=Dependent, A=Advised, N=Not used

Remark:

Example:

```
FTX+AAA+++GOODS DESCRIPTION'
```

Counter	No	Tag	St	MaxOcc	Level	Name
0890		**SG18**	M	999	1	**GID-TMP-RNG-LOC-PIA-FTX-SG20-SG22-SG23-SG24-SG27-S30**
0980	69	**FTX**	D	1	2	**Free text**

Beschreibung: Mandatory if the IFTMCS data is used for a summary declaration of temporary storage

		Standard		Implementation		
Tag	Name	St	Format	St	Format	Usage / Remark
FTX						
4451	Text subject code qualifier	M	an..3	M	an..3	**AAH Customs information**
4453	Free text function code	C	an..3	N		Not used
C107	Text reference	C		N		
4441	Free text value code	M	an..17	N		Not used
1131	Code list identification code	C	an..17	N		Not used
3055	Code list responsible agency code	C	an..3	N		Not used
C108	Text literal	C		M		
4440	Free text value	M	an..512	M	an1	Only used when using the IFTMCS to submit data for the summary declaration of temporary storage to the BIP. This field contains the current customs status of the goods in coded form, valid codes are provided in ATLAS Codelist 2110 (to be obtained from german customs). **Field (SumA):** Customs status of goods **C Community Goods** **F Community goods with status T2F or TF** **N Non-Community Goods (T1)**
4440	Free text value	C	an..512	N		Not used
4440	Free text value	C	an..512	N		Not used
4440	Free text value	C	an..512	N		Not used
4440	Free text value	C	an..512	N		Not used
3453	Language name code	C	an..3	N		Not used
4447	Free text format code	C	an..3	N		Not used

Remark:

Example:

```
FTX+AAH+++F'
```

No = Consecutive segment number
MaxOcc = Maximum occurrence of the segment/group
Counter = Counter of segment/group within the standard

St = Status
EDIFACT: M=Mandatory, C=Conditional
User specific: R=Required, O=Optional, D=Dependent, A=Advised, N=Not used

Counter	No	Tag	St	MaxOcc	Level	Name
0890		**SG18**	M	999	1	**GID-TMP-RNG-LOC-PIA-FTX-SG20-SG22-SG23-SG24-SG27-S30**
0980	70	**FTX**	C	1	2	**Free text**

Beschreibung: Used only if the IFTMCS data is used for the summary declaration of temporary storage

		Standard		Implementation		
Tag	Name	St	Format	St	Format	Usage / Remark
FTX						
4451	Text subject code qualifier	M	an..3	M	an..3	**MKS Additional marks/numbers information**
4453	Free text function code	C	an..3	N		Not used
C107	Text reference	C		N		
4441	Free text value code	M	an..17	N		Not used
1131	Code list identification code	C	an..17	N		Not used
3055	Code list responsible agency code	C	an..3	N		Not used
C108	Text literal	C		M		
4440	Free text value	M	an..512	M	an..512	This fields' contents will be sent to customs as a unique reference when using the IFTMCS data for the summary declaration of temporary storage. If FTX+MKS is not submitted, a combination of B/L-No., container number and position number is used. **Field (SumA):** Unique Reference (SpO) **Remark (SumA):** Container-No. + B/L-No. + position no. will be used as SpO if this field is not used.
4440	Free text value	C	an..512	N		Not used
4440	Free text value	C	an..512	N		Not used
4440	Free text value	C	an..512	N		Not used
4440	Free text value	C	an..512	N		Not used
3453	Language name code	C	an..3	N		Not used
4447	Free text format code	C	an..3	N		Not used

Remark:

Example:

```
FTX+MKS+++X'
```

No = Consecutive segment number
MaxOcc = Maximum occurrence of the segment/group
Counter = Counter of segment/group within the standard

St = Status
EDIFACT: M=Mandatory, C=Conditional
User specific: R=Required, O=Optional, D=Dependent, A=Advised, N=Not used

Counter	No	Tag	St	MaxOcc	Level	Name
1040		**SG20**	M	1	2	**MEA**
1050	71	**MEA**	M	1	2	**Gross Weight (Goods Item Level)**

Beschreibung:

		Standard		Implementation		
Tag	Name	St	Format	St	Format	Usage / Remark
MEA						
6311	Measurement purpose code qualifier	M	an..3	M	an..3	**AAE Measurement**
C502	Measurement details	C		M		
6313	Measured attribute code	C	an..3	M	an..3	**G Gross weight**
6321	Measurement significance code	C	an..3	N		Not used
6155	Non-discrete measurement name code	C	an..17	N		Not used
6154	Non-discrete measurement name	C	an..70	N		Not used
C174	Value/range	C		M		
6411	Measurement unit code	M	an..3	M	an..3	**KGM kilogram**
6314	Measurement value	C	an..18	M	n..14,3	Gross weight of the goods, including packaging and other material. Three decimals after the comma are allowed; the unit is kilogram. **Field (SumA):** Gross Weight, if not given in SG28 MEA+WT per container **Field (ZAPP):** Gross Weight **Field (EXS):** Gross Weight
6162	Range minimum value	C	n..18	N		Not used
6152	Range maximum value	C	n..18	N		Not used
6432	Significant digits quantity	C	n..2	N		Not used
7383	Surface or layer code	C	an..3	N		Not used

Remark:

Example:

```
MEA+AAE+G+KGM:22500'
```

No = Consecutive segment number
MaxOcc = Maximum occurrence of the segment/group
Counter = Counter of segment/group within the standard

St = Status
EDIFACT: M=Mandatory, C=Conditional
User specific: R=Required, O=Optional, D=Dependent, A=Advised, N=Not used

Counter	No	Tag	St	MaxOcc	Level	Name
1100		**SG22**	D	1	2	**RFF**

Remark: Required for local summary declaration ("Import SumA"), if MRN from entry summary declaration exists. This segment group has to be specified for the creation of a summary declaration. Either the MRN of an ENS declaration must be specified or the respective exemption.

In case of transports within Europe the MRN of an export procedure may be transmitted in another RFF+AEI, in order to use it for the Transshipment declaration in ZAPP (see below).

1110	72	**RFF**	M	1	2	**MRN of ENS declaration (Goods Item level) or exemption**

Beschreibung:

		Standard		Implementation		
Tag	Name	St	Format	St	Format	Usage / Remark
RFF						
C506	Reference	M		M		
1153	Reference code qualifier	M	an..3	M	an..3	In order to harmonise the interfaces, the qualifier AEI has been introduced. AEI and MRN may be used synonoumsly. Since the qualifier "MRN" will be removed in later versions, the usage of "AEI" is recommended. **MRN Mailing reference number** **AEI Registration number of previous Customs declaration**
1154	Reference identifier	C	an..70	D	an..35	NOTE: Might be used only if no MRN has been provided on header level! If the summary declaration of temporary storage should be triggered based on data from this IFTMCS message and an MRN number is indicated here, BIP will assume that the summary declaration has been preceded by an entry summary declaration with the MRN provided. The exemption reason has to be specified in case of previous document type OESUMA (e.g. transports within Europe). Length depending on the previous document type: ESUMA: an18 (MRN) OESUMA: an..30 (exemption) Mandatory field in case of previous document type OESUMA As of Feb 1st, 2020 the reason for exemption must be entered as follows: RFF+AEI:Art.136 UZK u Art. 104 UZK-DA::OESUMA **Field (SumA):** MRN from ENS Declaration (Goods Item Level)
1156	Document line identifier	C	an..6	D	an..5	Position ID of an MRN from a previous entry summary declaration Mandatory, if type of previous document is ESUMA!
4000	Reference version identifier	C	an..35	D	an..6	Default value is ESUMA. **Previous document type** **ESUMA MRN of an Entry summary declaration** **OESUMA An entry summary declaration has not been required, e. g. transports within Europe**
1060	Revision identifier	C	an..6	N		Not used

Remark:
The MRN from a Customs transit procedure must not be entered here.

Example:
```
RFF+AEI:11DE32101234567898:1:ESUMA'
```
RFF+AEI:Art.136 UZK u Art. 104 UZK-DA::OESUMA

No = Consecutive segment number
MaxOcc = Maximum occurrence of the segment/group
Counter = Counter of segment/group within the standard

St = Status
EDIFACT: M=Mandatory, C=Conditional
User specific: R=Required, O=Optional, D=Dependent, A=Advised, N=Not used

Counter	No	Tag	St	MaxOcc	Level	Name
1100		**SG22**	C	9	2	**RFF**

This segment group can be used in declarations for ZAPP if a MRN for an export procedure is available. Please include the SG22 for Summary Declarations using the qualifier OESUMA if an exemption reason is available. This variant of SG22 is not used by the BIP platform.

1110	73	**RFF**	M	1	2	**Reference**

Beschreibung:

		Standard		Implementation		
Tag	Name	St	Format	St	Format	Usage / Remark
RFF						
C506	Reference	M		M		
1153	Reference code qualifier	M	an..3	M	an..3	**AEI Registration number of previous Customs declaration**
1154	Reference identifier	C	an..70	R	an..18	MRN of an export procedure. May be specified if the goods were loaded in an European port. An existing export declaration is required and the export procedure has to be completed in another port. A German MRN (DE at digit 3-4) must not be specified.
1156	Document line identifier	C	an..6	N		Not used
4000	Reference version identifier	C	an..35	R	an..35	**AE Export procedure**
1060	Revision identifier	C	an..6	N		Not used

Remark:

Example:

```
RFF+AEI:12SEE4RJ0H591PAIX4::AE'
```

No = Consecutive segment number
MaxOcc = Maximum occurrence of the segment/group
Counter = Counter of segment/group within the standard

St = Status
EDIFACT: M=Mandatory, C=Conditional
User specific: R=Required, O=Optional, D=Dependent, A=Advised, N=Not used

Counter	No	Tag	St	MaxOcc	Level	Name
1100		**SG22**	C	9	2	**RFF-DTM**

Only use in a transshipment export manifest.
To be used only if BIP shall not an exit summary declaration (EXS) automatically or if the standing time surpasses 13 or more days.

Use this segment group to transmit the MRN of an EXS. In this case, BIP will not create an EXS declaration itself but rather use the MRN for the creation of a BHT transshipmentorder.

Please note the following points:
* The exit summary declaration must have been created 24 hours before loading. The compliance deadline is to be ensured by the applicant.
* The exit summary declaration must be sent to the customs office of exit where the goods are finally loaded on a vessel leaving the EU. For Bremerhaven the ATLAS MRN must respect the following format:
YYDE2452NNNNNNNNXP
- YY = Year
- DE = Country code, only DE is valid
- 2452= Customs office of exit. If the EXS was not sent to that office, it may not be used.
- N(8) = numeric value
- 'X' = constant value for the MRN of an exit summary declaration
- P = check digit

1110	74	**RFF**	M	1	2	**Reference**

Beschreibung:

		Standard		Implementation		
Tag	Name	St	Format	St	Format	Usage / Remark
RFF						
C506	Reference	M		M		
1153	Reference code qualifier	M	an..3	M	an..3	**AEI Registration number of previous Customs declaration**
1154	Reference identifier	C	an..70	M	an18	**Field (BHT):** Previous document reference
1156	Document line identifier	C	an..6	N		Not used
4000	Reference version identifier	C	an..35	M	an..35	**ASUMA Exit summary declaration**
1060	Revision identifier	C	an..6	N		Not used

Remark:

Example:
```
RFF+AEI:12DE245200628651X1::ASUMA'
```

No = Consecutive segment number
MaxOcc = Maximum occurrence of the segment/group
Counter = Counter of segment/group within the standard

St = Status
EDIFACT: M=Mandatory, C=Conditional
User specific: R=Required, O=Optional, D=Dependent, A=Advised, N=Not used

Counter	No	Tag	St	MaxOcc	Level	Name
1100		**SG22**	C	9	2	**RFF-DTM**

Only use in a transshipment export manifest.
To be used only if BIP shall not an exit summary declaration (EXS) automatically or if the standing time surpasses 13 or more days.

Use this segment group to transmit the MRN of an EXS. In this case, BIP will not create an EXS declaration itself but rather use the MRN for the creation of a BHT transshipmentorder.

Please note the following points:
* The exit summary declaration must have been created 24 hours before loading. The compliance deadline is to be ensured by the applicant.
* The exit summary declaration must be sent to the customs office of exit where the goods are finally loaded on a vessel leaving the EU. For Bremerhaven the ATLAS MRN must respect the following format:
YYDE2452NNNNNNNNXP
- YY = Year
- DE = Country code, only DE is valid
- 2452= Customs office of exit. If the EXS was not sent to that office, it may not be used.
- N(8) = numeric value
- 'X' = constant value for the MRN of an exit summary declaration
- P = check digit

1120	75	**DTM**	C	9	3	**Issue date**

Beschreibung: The exit summary declaration (EXS) has to be created 24 hours before the loading. This segment may be used to specify the creation date/time of the MRN. The default value is the date/time of entry of the export manifest.

		Standard		Implementation		
Tag	Name	St	Format	St	Format	Usage / Remark
DTM						
C507	Date/time/period	M		M		
2005	Date or time or period function code qualifier	M	an..3	M	an..3	**182 Issue date**
2380	Date or time or period value	C	an..35	M	an..35	
2379	Date or time or period format code	C	an..3	M	an..3	**203 CCYYMMDDHHMM**

Remark:

Example:
```
DTM+182:201208151155:203'
```

No = Consecutive segment number
MaxOcc = Maximum occurrence of the segment/group
Counter = Counter of segment/group within the standard

St = Status
EDIFACT: M=Mandatory, C=Conditional
User specific: R=Required, O=Optional, D=Dependent, A=Advised, N=Not used

Counter	No	Tag	St	MaxOcc	Level	Name
1130		**SG23**	C	9	2	**PCI**
1140	76	**PCI**	M	1	2	**Marks & Numbers**

Beschreibung:

		Standard		Implementation		
Tag	Name	St	Format	St	Format	Usage / Remark
PCI						
4233	Marking instructions code	C	an..3	N		Not used
C210	Marks & labels	C		C		
7102	Shipping marks description	M	an..35	M	an..35	Marks & Numbers, Part 1
7102	Shipping marks description	C	an..35	C	an..35	Marks & Numbers, Part 2
7102	Shipping marks description	C	an..35	C	an..35	Marks & Numbers, Part 3
7102	Shipping marks description	C	an..35	C	an..35	Marks & Numbers, Part 4
7102	Shipping marks description	C	an..35	C	an..35	Marks & Numbers, Part 5
7102	Shipping marks description	C	an..35	C	an..35	Marks & Numbers, Part 6
7102	Shipping marks description	C	an..35	C	an..35	Marks & Numbers, Part 7
7102	Shipping marks description	C	an..35	C	an..35	Marks & Numbers, Part 8
7102	Shipping marks description	C	an..35	C	an..35	Marks & Numbers, Part 9
7102	Shipping marks description	C	an..35	C	an..35	Marks & Numbers, Part 10
8275	Container or package contents indicator code	C	an..3	N		Not used
C827	Type of marking	C		N		
7511	Marking type code	M	an..3	N		Not used
1131	Code list identification code	C	an..17	N		Not used
3055	Code list responsible agency code	C	an..3	N		Not used

Remark:

Example:

```
PCI++X:X:X:X:X:X:X:X:X:X'
```

No = Consecutive segment number
MaxOcc = Maximum occurrence of the segment/group
Counter = Counter of segment/group within the standard

St = Status
EDIFACT: M=Mandatory, C=Conditional
User specific: R=Required, O=Optional, D=Dependent, A=Advised, N=Not used

Counter	No	Tag	St	MaxOcc	Level	Name
1180		**SG24**	C	9	2	**DOC**
1190	77	**DOC**	M	1	2	**Document/message details**

Beschreibung:

This segment will be processed by BIP only!

		Standard		Implementation		
Tag	Name	St	Format	St	Format	Usage / Remark
DOC						
C002	Document/message name	M		M		
1001	Document name code	C	an..3	M	n3	**916 Related document**
1131	Code list identification code	C	an..17	N		Not used
3055	Code list responsible agency code	C	an..3	N		Not used
1000	Document name	C	an..35	M	an..4	Type of documents/certificates. Use code according to German Customs list C0013 EAS.
C503	Document/message details	C		M		
1004	Document identifier	C	an..35	M	an..35	Reference number of document/certificate
1373	Document status code	C	an..3	N		Not used
1366	Document source description	C	an..70	N		Not used
3453	Language name code	C	an..3	N		Not used
1056	Version identifier	C	an..9	N		Not used
1060	Revision identifier	C	an..6	N		Not used
3153	Communication medium type code	C	an..3	N		Not used
1220	Document copies required quantity	C	n..2	N		Not used
1218	Document originals required quantity	C	n..2	N		Not used

Remark:

Example:

```
DOC+916:::Y920+VU/BuG1'
```

No = Consecutive segment number
MaxOcc = Maximum occurrence of the segment/group
Counter = Counter of segment/group within the standard

St = Status
EDIFACT: M=Mandatory, C=Conditional
User specific: R=Required, O=Optional, D=Dependent, A=Advised, N=Not used

Counter	No	Tag	St	MaxOcc	Level	Name
1260		**SG27**	M	999	2	**SGP-SG28**

Remark: Mandatory for containerised goods or vehicles. Also mandatory for break bulk if IFTMCS is sent to BIP. For IMP it is strongly recommended, that is used for break bulk, too.

1270	78	**SGP**	M	1	2	**Container Number**

Beschreibung:

		Standard		Implementation		
Tag	Name	St	Format	St	Format	Usage / Remark
SGP						
C237	Equipment identification	M		M		
8260	Equipment identifier	C	an..17	M	an..17	**Field (ZAPP):** Container Number **Field (EXS):** Container Number
1131	Code list identification code	C	an..17	N		Not used
3055	Code list responsible agency code	C	an..3	N		Not used
3207	Country name code	C	an..3	N		Not used
7224	Package quantity	C	n..8	D	n..5	Number of packages that are related with this container. Must be sent if the summary declaration of temporary storage should be triggered based on data from this IFTMCS message and the goods are containerized. **Field (SumA):** Number of Packages

Remark:

Example:

```
SGP+CARR3322115+9'
```

No = Consecutive segment number
MaxOcc = Maximum occurrence of the segment/group
Counter = Counter of segment/group within the standard

St = Status
EDIFACT: M=Mandatory, C=Conditional
User specific: R=Required, O=Optional, D=Dependent, A=Advised, N=Not used

Counter	No	Tag	St	MaxOcc	Level	Name
1290		**SG28**	C	1	3	**MEA**
1300	79	**MEA**	M	1	3	**Weight per container**

Beschreibung:

		Standard		Implementation		
Tag	Name	St	Format	St	Format	Usage / Remark
MEA						
6311	Measurement purpose code qualifier	M	an..3	M	an..3	**WT Weights**
C502	Measurement details	C		M		
6313	Measured attribute code	C	an..3	M	an..3	**G Gross weight**
6321	Measurement significance code	C	an..3	N		Not used
6155	Non-discrete measurement name code	C	an..17	N		Not used
6154	Non-discrete measurement name	C	an..70	N		Not used
C174	Value/range	C		M		
6411	Measurement unit code	M	an..3	M	an..3	**KGM kilogram**
6314	Measurement value	C	an..18	M	n..14,3	Gross Weight of the part of the goods which have been loaded in the container indicated in the SGP segment. Three decimals after the comma are allowed; the unit is kilogram. Following format is recommended when using IMP: n..6 (5,1) Max.5 digits, one decimal. **Field (SumA):** Gross Weight (per container)
6162	Range minimum value	C	n..18	N		Not used
6152	Range maximum value	C	n..18	N		Not used
6432	Significant digits quantity	C	n..2	N		Not used
7383	Surface or layer code	C	an..3	N		Not used

Remark:

Example:

```
MEA+WT+G+KGM:4500'
```

No = Consecutive segment number
MaxOcc = Maximum occurrence of the segment/group
Counter = Counter of segment/group within the standard

St = Status
EDIFACT: M=Mandatory, C=Conditional
User specific: R=Required, O=Optional, D=Dependent, A=Advised, N=Not used

Counter	No	Tag	St	MaxOcc	Level	Name
1410		**SG30**	C	99	2	**DGS-FTX**
1420	80	**DGS**	M	1	2	**Dangeous Goods (DG) Information**

Beschreibung:

		Standard		Implementation		
Tag	Name	St	Format	St	Format	Usage / Remark
DGS						
8273	Dangerous goods regulations code	C	an..3	M	an..3	**IMD IMO IMDG code**
C205	Hazard code	C		M		
8351	Hazard identification code	M	an..7	M	an..7	DG Code
8078	Additional hazard classification identifier	C	an..7	N		Not used
8092	Hazard code version identifier	C	an..10	N		Not used
C234	UNDG information	C		M		
7124	United Nations Dangerous Goods (UNDG) identifier	C	n4	M	n4	UNDG Code **Field (EXS):** UN Dangerous Goods Code
7088	Dangerous goods flashpoint value	C	an..8	N		Not used
C223	Dangerous goods shipment flashpoint	C		C		
7106	Shipment flashpoint value	C	n3	C	n3	Flashpoint
6411	Measurement unit code	C	an..3	M	an..3	**CEL degree Celsius** **FAH degree Fahrenheit**
8339	Packaging danger level code	C	an..3	C	an..3	Packing Group
8364	Emergency procedure for ships identifier	C	an..6	N		Not used
8410	Hazard medical first aid guide identifier	C	an..4	N		Not used
8126	Transport emergency card identifier	C	an..10	N		Not used
C235	Hazard identification placard details	C		N		
8158	Orange hazard placard upper part identifier	C	an..4	N		Not used
8186	Orange hazard placard lower part identifier	C	an4	N		Not used
C236	Dangerous goods label	C		N		
8246	Dangerous goods marking identifier	C	an..4	N		Not used
8246	Dangerous goods marking identifier	C	an..4	N		Not used
8246	Dangerous goods marking identifier	C	an..4	N		Not used
8255	Packing instruction type code	C	an..3	N		Not used
8325	Hazardous means of transport category code	C	an..3	N		Not used
8211	Hazardous cargo transport authorisation code	C	an..3	N		Not used

Remark:

Example:

```
DGS+IMD+X+9999+999:CEL+1'
```

No = Consecutive segment number
MaxOcc = Maximum occurrence of the segment/group
Counter = Counter of segment/group within the standard

St = Status
EDIFACT: M=Mandatory, C=Conditional
User specific: R=Required, O=Optional, D=Dependent, A=Advised, N=Not used

Counter	No	Tag	St	MaxOcc	Level	Name
1410		**SG30**	C	99	2	**DGS-FTX**
1430	81	**FTX**	C	1	3	**Free text**

Beschreibung:

		Standard		Implementation		
Tag	Name	St	Format	St	Format	Usage / Remark
FTX						
4451	Text subject code qualifier	M	an..3	M	an..3	**AAD Dangerous goods, technical name**
4453	Free text function code	C	an..3	N		Not used
C107	Text reference	C		N		
4441	Free text value code	M	an..17	N		Not used
1131	Code list identification code	C	an..17	N		Not used
3055	Code list responsible agency code	C	an..3	N		Not used
C108	Text literal	C		M		
4440	Free text value	M	an..512	M	an..70	DG Technical Name
4440	Free text value	C	an..512	C	an..70	
4440	Free text value	C	an..512	C	an..70	
4440	Free text value	C	an..512	C	an..70	
4440	Free text value	C	an..512	C	an..70	
3453	Language name code	C	an..3	N		Not used
4447	Free text format code	C	an..3	N		Not used

Remark:

Example:

```
FTX+AAD+++X:X:X:X:X'
```

No = Consecutive segment number
MaxOcc = Maximum occurrence of the segment/group
Counter = Counter of segment/group within the standard

St = Status
EDIFACT: M=Mandatory, C=Conditional
User specific: R=Required, O=Optional, D=Dependent, A=Advised, N=Not used

Counter	No	Tag	St	MaxOcc	Level	Name
1550		**SG35**	M	99999	1	**EQD-MEA-DIM-SEL-TPL-FTX-RFF-RFF-SG37**
1560	82	**EQD**	M	1	1	**Container Information**

Beschreibung:

		Standard		Implementation		
Tag	Name	St	Format	St	Format	Usage / Remark
EQD						
8053	Equipment type code qualifier	M	an..3	M	an..3	**CN Container** **VIN Vehicle Identification Number** **BB Breakbulk**
C237	Equipment identification	C		M		
8260	Equipment identifier	C	an..17	M	an..17	Container Number, Vehicle Identification Number (in case of car transport) or i.e. BL number + position id (in case of breakbulk) **Fields (BHT):** Container number if 8053='CN', vehicle id if 8053='VIN' Forwarder's booking number
1131	Code list identification code	C	an..17	N		Not used
3055	Code list responsible agency code	C	an..3	N		Not used
3207	Country name code	C	an..3	N		Not used
C224	Equipment size and type	C		D		
8155	Equipment size and type description code	C	an..10	D	an..10	Container SizeType (accd. ISO); Mandatory if element 8053 in this segment has the value 'CN' **Field (BHT):** Container type, if 8053='CN'
1131	Code list identification code	C	an..17	N		Not used
3055	Code list responsible agency code	C	an..3	N		Not used
8154	Equipment size and type description	C	an..35	N		Not used
8077	Equipment supplier code	C	an..3	D	an..3	**1 Shipper supplied** **2 Carrier supplied** Shipper's Own Indicator; Mandatory if element 8053 in this segment has the value 'CN' **Field (BHT):** ShippersOwn, if 8053='CN'
8249	Equipment status code	C	an..3	N		Not used
8169	Full or empty indicator code	C	an..3	D	an..3	**4 Empty** **5 Full** Full/Empty Indicator; Mandatory if element 8053 in this segment has the value 'CN' **Field (BHT):** Empty container, if 8053='CN'

Remark:

Example:

```
EQD+CN+CARR3322115+1+1++5'
```

No = Consecutive segment number
MaxOcc = Maximum occurrence of the segment/group
Counter = Counter of segment/group within the standard

St = Status
EDIFACT: M=Mandatory, C=Conditional
User specific: R=Required, O=Optional, D=Dependent, A=Advised, N=Not used

Counter	No	Tag	St	MaxOcc	Level	Name
1550		**SG35**	M	99999	1	**EQD-MEA-DIM-SEL-TPL-FTX-RFF-RFF-SG37**
1590	83	**MEA**	R	2	2	**Measurements**

Beschreibung:

		Standard		Implementation		
Tag	Name	St	Format	St	Format	Usage / Remark
MEA						
6311	Measurement purpose code qualifier	M	an..3	M	an..3	**AAE Measurement**
C502	Measurement details	C		M		
6313	Measured attribute code	C	an..3	C	an..3	**T Tare weight** **G Gross weight**
6321	Measurement significance code	C	an..3	N		Not used
6155	Non-discrete measurement name code	C	an..17	N		Not used
6154	Non-discrete measurement name	C	an..70	N		Not used
C174	Value/range	C		M		
6411	Measurement unit code	M	an..3	M	an..3	**KGM kilogram**
6314	Measurement value	C	an..18	M	n..14,3	Three decimals after the comma are allowed; the unit is kilogram. **Fields (BHT):** Gross or Tare weight (tare weight only for containers)
6162	Range minimum value	C	n..18	N		Not used
6152	Range maximum value	C	n..18	N		Not used
6432	Significant digits quantity	C	n..2	N		Not used
7383	Surface or layer code	C	an..3	N		Not used

Remark:

Example:

```
MEA+AAE+T+KGM:4000'
```

No = Consecutive segment number
MaxOcc = Maximum occurrence of the segment/group
Counter = Counter of segment/group within the standard

St = Status
EDIFACT: M=Mandatory, C=Conditional
User specific: R=Required, O=Optional, D=Dependent, A=Advised, N=Not used

Counter	No	Tag	St	MaxOcc	Level	Name
1550		**SG35**	M	99999	1	**EQD-MEA-DIM-SEL-TPL-FTX-RFF-RFF-SG37**
1600	84	**DIM**	C	5	2	**Off dimension information**

Beschreibung: Off dimension information

		Standard		Implementation		
Tag	Name	St	Format	St	Format	Usage / Remark
DIM						
6145	Dimension type code qualifier	M	an..3	M	an..3	**5 Off-standard dimension front** **6 Off-standard dimension back** **7 Off-standard dimension right** **8 Off-standard dimension left** **9 Off-standard dimension general**
C211	Dimensions	M		M		At least one value has to be set.
6411	Measurement unit code	M	an..3	M	an..3	**CMT centimetre**
6168	Length dimension value	C	n..15	C	n..4	Length
6140	Width dimension value	C	n..15	C	n..4	Width
6008	Height dimension value	C	n..15	C	n..4	Height

Remark:

Example:

```
DIM+9+CMT:14:10:35'
```

No = Consecutive segment number
MaxOcc = Maximum occurrence of the segment/group
Counter = Counter of segment/group within the standard

St = Status
EDIFACT: M=Mandatory, C=Conditional
User specific: R=Required, O=Optional, D=Dependent, A=Advised, N=Not used

Counter	No	Tag	St	MaxOcc	Level	Name
1550		**SG35**	M	99999	1	**EQD-MEA-DIM-SEL-TPL-FTX-RFF-RFF-SG37**
1610	85	**SEL**	C	99	2	**Seal IDs**

Beschreibung:

		Standard		Implementation		
Tag	Name	St	Format	St	Format	Usage / Remark
SEL						
9308	Seal identifier	C	an..35	M	an..20	Seal Number
C215	Seal issuer	C		C		
9303	Sealing party name code	C	an..3	C	an..3	Seal issuer. Currently, only code AB for "unknown" is allowed. **AB Unknown**
1131	Code list identification code	C	an..17	N		Not used
3055	Code list responsible agency code	C	an..3	N		Not used
9302	Sealing party name	C	an..35	N		Not used
4517	Seal condition code	C	an..3	N		Not used
C208	Identity number range	C		N		
7402	Object identifier	M	an..35	N		Not used
7402	Object identifier	C	an..35	N		Not used

Remark:

Example:

```
SEL+1210404+AB'
```

No = Consecutive segment number
MaxOcc = Maximum occurrence of the segment/group
Counter = Counter of segment/group within the standard

St = Status
EDIFACT: M=Mandatory, C=Conditional
User specific: R=Required, O=Optional, D=Dependent, A=Advised, N=Not used

Counter	No	Tag	St	MaxOcc	Level	Name
1550		**SG35**	M	99999	1	**EQD-MEA-DIM-SEL-TPL-FTX-RFF-RFF-SG37**
1620	86	**TPL**	O	1	2	**Transport placement**

Beschreibung:

		Standard		Implementation		
Tag	Name	St	Format	St	Format	Usage / Remark
TPL						
C222	Transport identification	M		M		
8213	Transport means identification name identifier	C	an..9	M	an..9	**BARGE** **RAIL** **SEA** **TRUCK** On carriage transport mode. Code "BARGE" includes any inland waterway transport.
1131	Code list identification code	C	an..17	C	an..17	Optional: Call sign of Feeder Vessel for further loading
3055	Code list responsible agency code	C	an..3	N		Not used
8212	Transport means identification name	C	an..35	C	an..35	Optional: Name of Feeder Vessel for further loading
8453	Transport means nationality code	C	an..3	N		Not used

Remark:

Example:

```
TPL+TRUCK'
```

No = Consecutive segment number
MaxOcc = Maximum occurrence of the segment/group
Counter = Counter of segment/group within the standard

St = Status
EDIFACT: M=Mandatory, C=Conditional
User specific: R=Required, O=Optional, D=Dependent, A=Advised, N=Not used

Counter	No	Tag	St	MaxOcc	Level	Name
1550		**SG35**	M	99999	1	**EQD-MEA-DIM-SEL-TPL-FTX-RFF-RFF-SG37**
1650	87	**FTX**	C	1	2	**Free text**

Beschreibung:

		Standard		Implementation		
Tag	Name	St	Format	St	Format	Usage / Remark
FTX						
4451	Text subject code qualifier	M	an..3	M	an..3	**ACQ Off-dimension information**
4453	Free text function code	C	an..3	N		Not used
C107	Text reference	C		N		
4441	Free text value code	M	an..17	N		Not used
1131	Code list identification code	C	an..17	N		Not used
3055	Code list responsible agency code	C	an..3	N		Not used
C108	Text literal	C		M		
4440	Free text value	M	an..512	M	an..512	Textual information about oversized equipment
4440	Free text value	C	an..512	N		Not used
4440	Free text value	C	an..512	N		Not used
4440	Free text value	C	an..512	N		Not used
4440	Free text value	C	an..512	N		Not used
3453	Language name code	C	an..3	N		Not used
4447	Free text format code	C	an..3	N		Not used

Remark:

Example:

```
FTX+ACQ+++X'
```

No = Consecutive segment number
MaxOcc = Maximum occurrence of the segment/group
Counter = Counter of segment/group within the standard

St = Status
EDIFACT: M=Mandatory, C=Conditional
User specific: R=Required, O=Optional, D=Dependent, A=Advised, N=Not used

Counter	No	Tag	St	MaxOcc	Level	Name
1550		**SG35**	M	99999	1	**EQD-MEA-DIM-SEL-TPL-FTX-RFF-RFF-SG37**
1660	88	**RFF**	O	9	2	**Reference**

Beschreibung: System specific voyage numbers
This segment ist not used by the BIP platform.

		Standard		Implementation		
Tag	Name	St	Format	St	Format	Usage / Remark
RFF						
C506	Reference	M		M		
1153	Reference code qualifier	M	an..3	M	an..3	**DAK DAKOSY conveyance number (if using IMP)**
1154	Reference identifier	C	an..70	M	an..70	**Remark (ZAPP):** Format: AN3 - DAKOSY-liner agent's code AN4 - identifier
1156	Document line identifier	C	an..6	N		Not used
4000	Reference version identifier	C	an..35	N		Not used
1060	Revision identifier	C	an..6	N		Not used

Remark:

Example:
```
RFF+DAK:DKL4711'
```

No = Consecutive segment number
MaxOcc = Maximum occurrence of the segment/group
Counter = Counter of segment/group within the standard

St = Status
EDIFACT: M=Mandatory, C=Conditional
User specific: R=Required, O=Optional, D=Dependent, A=Advised, N=Not used

Counter	No	Tag	St	MaxOcc	Level	Name
1550		**SG35**	M	99999	1	**EQD-MEA-DIM-SEL-TPL-FTX-RFF-RFF-SG37**
1660	89	**RFF**	C	9	2	**Booking reference**

Beschreibung:

		Standard		Implementation		
Tag	Name	St	Format	St	Format	Usage / Remark
RFF						
C506	Reference	M		M		
1153	Reference code qualifier	M	an..3	M	an..3	BIP: For oncarriage by vessel the Booking reference number of the main carrier has to be entered. **BN Booking reference number**
1154	Reference identifier	C	an..70	M	an..35	Carrier's booking reference **Field (BHT):** Container booking number
1156	Document line identifier	C	an..6	N		Not used
4000	Reference version identifier	C	an..35	N		Not used
1060	Revision identifier	C	an..6	N		Not used

Remark:

Example:

```
RFF+BN:HKG10X00102'
```

No = Consecutive segment number
MaxOcc = Maximum occurrence of the segment/group
Counter = Counter of segment/group within the standard

St = Status
EDIFACT: M=Mandatory, C=Conditional
User specific: R=Required, O=Optional, D=Dependent, A=Advised, N=Not used

Counter	No	Tag	St	MaxOcc	Level	Name
1550		**SG35**	M	99999	1	**EQD-MEA-DIM-SEL-TPL-FTX-RFF-RFF-SG37**
1660	90	**RFF**	C	9	2	**Reference**

Beschreibung:
Remark (SumA):
Remark (ZAPP):
BIP export manifest:

If an ATB number is provided, in case of an update of a preliminary Summary Declaration NO new ATB number will be issued by the ATLAS system, but the existing ATB number will be kept.

Exception: If it is determined by BIP that the temporary ATB number is at least 14 days old, a new ATB number is always issued by ATLAS.
If no registration number is provided, this will be interpreted as "A summary declaration of temporary storage was not
required"
If goods are repacked because of a defective container, here the ATB number of the import container must be specified for the transshipment process to be initiated in BIP.

		Standard		Implementation		
Tag	Name	St	Format	St	Format	Usage / Remark
RFF						
C506	Reference	M		M		
1153	Reference code qualifier	M	an..3	M	an..3	**XC Cargo control number**
1154	Reference identifier	C	an..70	C	an..35	
1156	Document line identifier	C	an..6	N		Not used
4000	Reference version identifier	C	an..35	N		Not used
1060	Revision identifier	C	an..6	N		Not used

Remark:

Example:
```
RFF+XC:ATB15000015409122452'
```

No = Consecutive segment number
MaxOcc = Maximum occurrence of the segment/group
Counter = Counter of segment/group within the standard

St = Status
EDIFACT: M=Mandatory, C=Conditional
User specific: R=Required, O=Optional, D=Dependent, A=Advised, N=Not used

Counter	No	Tag	St	MaxOcc	Level	Name
1550		**SG35**	M	99999	1	**EQD-MEA-DIM-SEL-TPL-FTX-RFF-RFF-SG37**
1660	91	**RFF**	C	9	2	**Reference**

Beschreibung: This field is being used, if the data shall be used to generate a transport order
This segment is IMP relevant only. Though BIP accepts the segment, it ignores the data.

		Standard		Implementation		
Tag	Name	St	Format	St	Format	Usage / Remark
RFF						
C506	Reference	M		M		
1153	Reference code qualifier	M	an..3	M	an..3	**ADN Inland transport order number**
1154	Reference identifier	C	an..70	R	an..30	
1156	Document line identifier	C	an..6	N		Not used
4000	Reference version identifier	C	an..35	N		Not used
1060	Revision identifier	C	an..6	N		Not used

Remark:

Example:
```
RFF+ADN:TPREF123'
```

No = Consecutive segment number
MaxOcc = Maximum occurrence of the segment/group
Counter = Counter of segment/group within the standard

St = Status
EDIFACT: M=Mandatory, C=Conditional
User specific: R=Required, O=Optional, D=Dependent, A=Advised, N=Not used

Counter	No	Tag	St	MaxOcc	Level	Name
1750		**SG37**	C	1	2	**NAD**
1760	92	**NAD**	M	1	2	**Container Operator**

Beschreibung:

		Standard		Implementation		
Tag	Name	St	Format	St	Format	Usage / Remark
NAD						
3035	Party function code qualifier	M	an..3	M	an..3	**CF Container operator/lessee**
C082	Party identification details	C		M		
3039	Party identifier	M	an..35	M	an..35	SCAC Code of the on carriage container operator
1131	Code list identification code	C	an..17	N		Not used
3055	Code list responsible agency code	C	an..3	N		Not used
C058	Name and address	C		C		
3124	Name and address description	M	an..35	M	an..35	Empty container return depot
3124	Name and address description	C	an..35	N		Not used
3124	Name and address description	C	an..35	N		Not used
3124	Name and address description	C	an..35	N		Not used
3124	Name and address description	C	an..35	N		Not used
C080	Party name	C		N		
3036	Party name	M	an..35	N		Not used
3036	Party name	C	an..35	N		Not used
3036	Party name	C	an..35	N		Not used
3036	Party name	C	an..35	N		Not used
3036	Party name	C	an..35	N		Not used
3045	Party name format code	C	an..3	N		Not used
C059	Street	C		N		
3042	Street and number or post office box identifier	M	an..35	N		Not used
3042	Street and number or post office box identifier	C	an..35	N		Not used
3042	Street and number or post office box identifier	C	an..35	N		Not used
3042	Street and number or post office box identifier	C	an..35	N		Not used
3164	City name	C	an..35	N		Not used
C819	Country sub-entity details	C		N		
3229	Country sub-entity name code	C	an..9	N		Not used
1131	Code list identification code	C	an..17	N		Not used
3055	Code list responsible agency code	C	an..3	N		Not used
3228	Country sub-entity name	C	an..35	N		Not used
3251	Postal identification code	C	an..17	N		Not used
3207	Country name code	C	an..3	N		Not used

Remark:

Example:

```
NAD+CF+CARR+X'
```

No = Consecutive segment number
MaxOcc = Maximum occurrence of the segment/group
Counter = Counter of segment/group within the standard

St = Status
EDIFACT: M=Mandatory, C=Conditional
User specific: R=Required, O=Optional, D=Dependent, A=Advised, N=Not used

Counter	No	Tag	St	MaxOcc	Level	Name
1750		**SG37**	D	1	2	**NAD**

This segment group is IMP relevant only. Though BIP accepts the segment group, it ignores the data.

1760	93	**NAD**	M	1	2	**Transport order: Delivery address**

Beschreibung:

		Standard		Implementation		
Tag	Name	St	Format	St	Format	Usage / Remark
NAD						
3035	Party function code qualifier	M	an..3	M	an..3	**UC Ultimate consignee**
C082	Party identification details	C		C		
3039	Party identifier	M	an..35	M	an..35	
1131	Code list identification code	C	an..17	N		Not used
3055	Code list responsible agency code	C	an..3	N		Not used
C058	Name and address	C		C		
3124	Name and address description	M	an..35	M	an..35	
3124	Name and address description	C	an..35	C	an..35	
3124	Name and address description	C	an..35	N		Not used
3124	Name and address description	C	an..35	N		Not used
3124	Name and address description	C	an..35	N		Not used
C080	Party name	C		C		
3036	Party name	M	an..35	N		Not used
3036	Party name	C	an..35	C	an..35	
3036	Party name	C	an..35	N		Not used
3036	Party name	C	an..35	N		Not used
3036	Party name	C	an..35	N		Not used
3045	Party name format code	C	an..3	N		Not used
C059	Street	C		C		
3042	Street and number or post office box identifier	M	an..35	M	an..35	
3042	Street and number or post office box identifier	C	an..35	N		Not used
3042	Street and number or post office box identifier	C	an..35	N		Not used
3042	Street and number or post office box identifier	C	an..35	N		Not used
3164	City name	C	an..35	C	an..35	
C819	Country sub-entity details	C		C		
3229	Country sub-entity name code	C	an..9	C	an..9	
1131	Code list identification code	C	an..17	N		Not used
3055	Code list responsible agency code	C	an..3	N		Not used
3228	Country sub-entity name	C	an..35	N		Not used
3251	Postal identification code	C	an..17	C	an..17	
3207	Country name code	C	an..3	C	an..3	

Remark:

Example:

```
NAD+UC+X+X:X+:X+X+X+X+X+AD'
```

No = Consecutive segment number
MaxOcc = Maximum occurrence of the segment/group
Counter = Counter of segment/group within the standard

St = Status
EDIFACT: M=Mandatory, C=Conditional
User specific: R=Required, O=Optional, D=Dependent, A=Advised, N=Not used

Counter	No	Tag	St	MaxOcc	Level	Name
1870	94	**UNT**	M	1	0	**Message trailer**

Beschreibung:

		Standard		Implementation		
Tag	Name	St	Format	St	Format	Usage / Remark
UNT						
0074	Number of segments in the message	M	n..6	M	n..6	
0062	Message reference number	M	an..14	M	an..14	

Remark:

Example:

```
UNT+92+20100122171055'
```

No = Consecutive segment number
MaxOcc = Maximum occurrence of the segment/group
Counter = Counter of segment/group within the standard

St = Status
EDIFACT: M=Mandatory, C=Conditional
User specific: R=Required, O=Optional, D=Dependent, A=Advised, N=Not used

Counter	No	Tag	St	MaxOcc	Level	Name
0000	95	**UNZ**	M	1	0	**Interchange trailer**

Beschreibung:

		Standard		Implementation		
Tag	Name	St	Format	St	Format	Usage / Remark
UNZ						
0036	Interchange control count	M	n..6	M	n..6	
0020	Interchange control reference	M	an..14	M	an..14	

Remark:

Example:

```
UNZ+1+20100123100000'
```

No = Consecutive segment number
MaxOcc = Maximum occurrence of the segment/group
Counter = Counter of segment/group within the standard

St = Status
EDIFACT: M=Mandatory, C=Conditional
User specific: R=Required, O=Optional, D=Dependent, A=Advised, N=Not used

5. Example Message

No	Tag	Example
01	**UNA**	UNA:+.? '
02	**UNB**	UNB+UNOC:3+CARR+BIP+100913:1221+20100123100000++++++1'
03	**UNH**	UNH+20100122171055+IFTMCS:D:00B:UN:BIP10'
04	**BGM**	BGM+707+201009121707+9'
05	**DTM**	DTM+137:201009121224:203' **Message Creation Date**
06	**TSR**	TSR+27+2'
07	**FTX**	FTX+OSI+++CONSORTIUM' **Liner Service**
08	**CNT**	CNT+7:9:KGM' **Total Gross Weight**
09	**CNT**	CNT+16:9' **Total number of containers**
10	**CNT**	CNT+11:15' **Total Number of Pieces**
11	**CNT**	CNT+2:1' **Number of goods positions**
	SG1	
12	**LOC**	LOC+91+:::SHENZEN'
	SG3	
13	**RFF**	RFF+BM:HJSC1234740' **B/L Number (Commercial Reference Number)**
	SG3	
14	**RFF**	RFF+SRN:DZ303920101025' **Forwarder's reference**
	SG3	
15	**RFF**	RFF+ATY:65544' **Release order reference**
16	**DTM**	DTM+36:20120926:102' **Date of expiry**
	SG3	
17	**RFF**	RFF+DIR:TS' **Transportrichtung**
	SG3	
18	**RFF**	RFF+BGM:929' **Indicator for generation of further messages**
	SG3	
19	**RFF**	RFF+CUS:1' **Indicator for generation of Re-Export Notification/EXS**
	SG3	

No = Consecutive segment number

No	Tag	Example
20	**RFF**	RFF+ACW:201049516472' **Reference / Local Reference Number of original declaration**
	SG3	
21	**RFF**	RFF+AEI:11DE32101234567898::ESUMA' **ID of previous customs declaration**
	SG3	
22	**RFF**	RFF+XC:ATB120005410540540:1' **Customs Reference to summary declaration**
	SG3	
23	**RFF**	RFF+030:IOI' **On Carriage Instructions**
	SG8	
24	**TDT**	TDT+20+ABC0021W+1+11+CARR:::CARRIER+++9999999:::CARRIERS VESSEL:AD' **Vessel Information**
	SG9	
25	**LOC**	LOC+11+DEBRV:::BREMERHAVEN+C1:::CONTAINER TERMINAL 1+DE+N'
26	**DTM**	DTM+132:20100914:102'
27	**DTM**	DTM+133:20100915:102'
	SG9	
28	**LOC**	LOC+92+HKHKG:139:6+++002' **Routing**
	SG9	
29	**LOC**	LOC+9+USCHI:::CHICAGO+C2:::CONTAINER TERMINAL 2+US'
30	**DTM**	DTM+186:20100906:102'
31	**DTM**	DTM+133:20110706:102'
	SG9	
32	**LOC**	LOC+170+USDET:::DETROIT'
	SG9	
33	**LOC**	LOC+41+NL035411+++0'
34	**DTM**	DTM+132:201009111223:203'
	SG10	
35	**RFF**	RFF+VM:V612F'
	SG10	
36	**RFF**	RFF+SIS:FH3D051' **DAKOSY- or SIS Voyage Number**
	SG8	
37	**TDT**	TDT+30++1++CARR+++:::ONCARRIAGE VESSEL'
	SG9	
38	**LOC**	LOC+170+INBOM:::MUMBAI'
39	**DTM**	DTM+133:201010241625:203'

No = Consecutive segment number

No	Tag	Example
	SG10	
40	**RFF**	RFF+SIS:E483' **DAKOSY- or SIS Voyage Number**
	SG11	
41	**NAD**	NAD+MS++DE870515478:1111+PRESENTER:COMPANY:DE+ABC-STRASSE 32:ORTSTEIL+GESTELLSTADT++12345+DE' **Information about the presenter / the company lodging the declaration**
	SG12	
42	**CTA**	CTA+IC+:Mr. X'
43	**COM**	COM+040370030:TE'
	SG11	
44	**NAD**	NAD+CG+++CARRIER COMPANY+WINROAD 21+HONGKONG++123450+CN' **Information about the carrier**
	SG12	
45	**CTA**	CTA+IC+:Mr. Y'
46	**COM**	COM+0023 456-78:TE'
	SG11	
47	**NAD**	NAD+CZ++NL454545555:2222+Shipping Company+40 Zhengu Road+Hong Kong++12345+CN' **Information about the shipper/consignor**
	SG11	
48	**NAD**	NAD+CN++DE454554500000002:0000+EMPFAENGER GMBH+STRASSE 72+DRESDEN++01900+DE' **Information about the consignee**
	SG12	
49	**CTA**	CTA+NT'
50	**COM**	COM+someone@dbh.de:EM'
	SG12	
51	**CTA**	CTA+CN+:PETER MEIER'
52	**COM**	COM+X:EM'
	SG11	
53	**NAD**	NAD+N1+++VERGISSMEINNICHT AG+EINESTRASSE 99+LEIPZIG++01300+DE' **Notify Party**
	SG11	
54	**NAD**	NAD+AG++DE566565656655555:0002' **Information about the representative**
	SG11	
55	**NAD**	NAD+SN++DE12345678901:0001' **Warehouse Keeper**
	SG15	
56	**RFF**	RFF+WS:1' **Storage Location**

No = Consecutive segment number

No	Tag	Example
	SG11	
57	**NAD**	NAD+PK++Paul Meier:abc:def+Prokurist:ghi:jkl' **Information about the person lodging a declaration**
	SG12	
58	**CTA**	CTA+IC'
59	**COM**	COM+04211234560:TE' **Contact details of responsible Person**
	SG11	
60	**NAD**	NAD+CPE+HJCU' **Vessel Operator**
	SG18	
61	**GID**	GID+1+9:1A1:::X:1' **Package information**
62	**TMP**	TMP+2+9:CEL'
63	**RNG**	RNG+12+CEL:9:9'
64	**LOC**	LOC+27+CN' **Country of origin**
65	**LOC**	LOC+28+IN' **Country of destination**
66	**LOC**	LOC+7+:::MUENCHEN' **Place of (final) destination**
67	**PIA**	PIA+5+1234:HS' **Commodity code**
68	**FTX**	FTX+AAA+++GOODS DESCRIPTION' **Goods Description**
69	**FTX**	FTX+AAH+++F'
70	**FTX**	FTX+MKS+++X'
	SG20	
71	**MEA**	MEA+AAE+G+KGM:22500' **Gross Weight (Goods Item Level)**
	SG22	
72	**RFF**	RFF+AEI:11DE32101234567898:1:ESUMA' **MRN of ENS declaration (Goods Item level) or exemption**
	SG22	
73	**RFF**	RFF+AEI:12SEE4RJ0H591PAIX4::AE'
	SG22	
74	**RFF**	RFF+AEI:12DE245200628651X1::ASUMA'
75	**DTM**	DTM+182:201208151155:203' **Issue date**
	SG23	
76	**PCI**	PCI++X:X:X:X:X:X:X:X:X:X' **Marks & Numbers**

No = Consecutive segment number

No	Tag	Example
	SG24	
77	**DOC**	DOC+916:::Y920+VU/BuG1'
	SG27	
78	**SGP**	SGP+CARR3322115+9' **Container Number**
	SG28	
79	**MEA**	MEA+WT+G+KGM:4500' **Weight per container**
	SG30	
80	**DGS**	DGS+IMD+X+9999+999:CEL+1' **Dangeous Goods (DG) Information**
81	**FTX**	FTX+AAD+++X:X:X:X:X'
	SG35	
82	**EQD**	EQD+CN+CARR3322115+1+1++5' **Container Information**
83	**MEA**	MEA+AAE+T+KGM:4000'
84	**DIM**	DIM+9+CMT:14:10:35' **Off dimension information**
85	**SEL**	SEL+1210404+AB' **Seal IDs**
86	**TPL**	TPL+TRUCK'
87	**FTX**	FTX+ACQ+++X'
88	**RFF**	RFF+DAK:DKL4711'
89	**RFF**	RFF+BN:HKG10X00102' **Booking reference**
90	**RFF**	RFF+XC:ATB15000015409122452'
91	**RFF**	RFF+ADN:TPREF123'
	SG37	
92	**NAD**	NAD+CF+CARR+X' **Container Operator**
	SG37	
93	**NAD**	NAD+UC+X+X:X+:X+X+X+X+X+AD' **Transport order: Delivery address**
94	**UNT**	UNT+92+20100122171055'
95	**UNZ**	UNZ+1+20100123100000'

No = Consecutive segment number